WOER

沃尔电力

WOER ELECTRIC

Important Notice

While Woer has made every effort to ensure the accuracy of the information in this catalog, Woer does not guarantee that it is errorless. Nor does Woer make any other warranty or guarantee that the information is accurate, reliable or current. Before application, you must evaluate them and determine if they are suitable for your intended application. Woer reserves all rights to make any rectification to the information contained at any time without notice.

SHENZHEN WOER ELECTRIC TECHNOLOGY CO.,LTD

Add: 2nd Floor, Phase 3, Woer Industrial Park, Lanjing North RD, Longtian Street, Pingshan, Shenzhen, China

Tel:86-755-28299419
Fax:86-755-28299099
Email:woer@woer.com
Http://en.woer.com

2022 A1

WOER

LV&MV Power Cable Accessories

PRODUCT CATALOGUE

WOER **SHENZHEN WOER ELECTRIC TECHNOLOGY CO.,LTD.**

Global Solution Provider

PEOPLE. PRODUCT. POWER.

Woer Group (Stock Code: 002130) is a high-tech enterprise with headquarter in Shenzhen, China. Founded in 1998, Woer has undergone dynamic growth and become one of the largest manufacturers of heat & cold shrinkable insulation material.

The Woer brand has always been a guarantee for the steady supply of products and services. From product design and raw materials sourcing to final inspection and testing, Woer has a perfect quality assurance program covering the entire production process. So far, we have been successfully certified by ISO 9001, ISO 14001, ISO/TS 16949, UL, CSA, 3C,etc. Also, we've acquired the Type Test certification from KEMA in 2007, and were authenticated by CNAS in 2011.

Shenzhen Woer Electric Technology Co., Ltd(Woer Electric), a major part of Woer Group, is well-known for its outstanding products and professional services. For more than 20 years, Woer Electric has been developing, manufacturing and marketing a broad range of cable accessories for reliable power transmission. And it has made tremendous contribution to the innovation of product design and manufacture. All our experiences, together with a strong commitment to R&D, have prepared us to be a global leader in cable accessories industry.

At Woer, we know this can be done.

Our Technology

We offer a full range of products for a wide variety of applications using heat shrink, cold shrink and cold applied technologies. Woer technology is based on specially formulated thermoplastic polymer materials or high quality silicone rubber. The material formulas are designed, selected and mixed in our own factory. Sophisticated process controls during extrusion, injection moulding, cross-linking and expansion ensure high quality and reliability of our products.

Innovation is the soul of a high-tech enterprise. To achieve this, we established several material labs and two fully equipped high voltage test labs with AC voltage withstand up to 1200kV. All the labs were authenticated by CNAS in 2011. Also, electrical, material and mechanical engineers are working in cross functional teams focused on new technologies and product developments.

Materials Laboratory

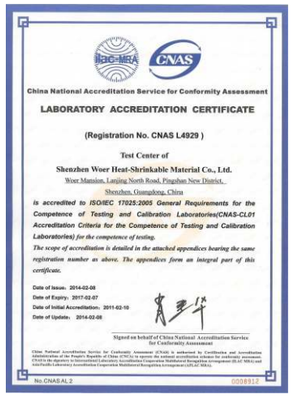

China National Accreditation Service for Conformity Assessment

LABORATORY ACCREDITATION CERTIFICATE

(Registration No. CNAS L4929)

Test Center of

Shenzhen Woer Heat-Shrinkable Material Co., Ltd.

Woer Mansion, Longing North Road, Pingshan New District, Shenzhen, Guangdong, China

is accredited to ISO/IEC 17025:2005 General Requirements for the Competence of Testing and Calibration Laboratories(CNAS-CL01 Accreditation Criteria for the Competence of Testing and Calibration Laboratories) for the competence of testing.

The scope of accreditation is detailed in the attached appendices bearing the same registration number as above. The appendices form an integral part of this certificate.

Date of Issue: 2014-02-08

Date of Expiry: 2017-02-07

Date of Initial Accreditation: 2011-02-10

Date of Update: 2014-02-08

Signed on behalf of China National Accreditation Service for Conformity Assessment

No.CNAS-AL 2

Laboratory Accreditation Certificate

Materials Laboratory

High Voltage Laboratory

Certificate CN19/30519.03

The management system of

Shenzhen Woer Electric Technology Co., Ltd.

Unified Social Credit Code: 91440300MA5FATL15J
Business Registration Address: 2nd Floor of Three Plant, Woer Industrial Park, Lanjing North Road, Longtian Street, Pingshan District, Shenzhen City
Business Operation Address: Woer Industrial Park, Lanjing North Road, Longtian Street, Pingshan District, Shenzhen City, Guangdong Province, P.R. China

Has been assessed under the management system of the certified organisation defined in the main certificate CN19/30519.00 as meeting the requirements of

ISO 9001:2015

For the following activities

Design and manufacture of cable accessories, cable line on-line monitoring system devices and insulation protective products.
Design of ceramic silicone rubbers

This certificate is valid from 28 March 2022 until 27 March 2026 and remains valid subject to satisfactory surveillance audits.
Issue 4.
The validity of this certificate depends on the validity of the main certificate.

Authorised by

SGS United Kingdom Ltd
Rossmore Business Park, Ellesmere Port, Cheshire, CH65 3EN, UK
t +44 (0)151 350 6666 - www.sgs.com
The certification information can be verified on the web site of Certification and Accreditation Administration of the People's Republic of China www.cnca.gov.cn

This document is issued by the Company subject to its General Conditions of Certification Services accessible at www.sgs.com/terms_and_conditions.htm. Attention is drawn to the limitations of liability, indemnification and jurisdictional issues established therein. The authenticity of this document may be verified at http://www.sgs.com/certified-clients-and-products/certified-client-directory. Any unauthorised alteration, forgery or falsification of the content or appearance of this document is unlawful and offenders may be prosecuted to the fullest extent of the law.

Page 1 of 1

ISO 9001:2015

Certificate CN12/30526.04

The management system of

Shenzhen Woer Electric Technology Co., Ltd.

Unified Social Credit Code: 91440300MA5FATL15J
Business Registration Address: 2nd Floor of Three Plant, Woer Industrial Park, Lanjing North Road, Longtian Street, Pingshan District, Shenzhen City
Business Operation Address: Woer Industrial Park, Lanjing North Road, Longtian Street, Pingshan District, Shenzhen City, Guangdong Province, P.R. China

Has been assessed under the management system of the certified organisation defined in the CN12/30526.00 as meeting the requirements of

ISO 14001:2015

For the following activities

Design and manufacture of cable accessories, cable line on-line monitoring system devices and insulation protective products.
Design of ceramic silicone rubbers

This certificate is valid from 09 March 2022 until 28 April 2024 and remains valid subject to satisfactory surveillance audits.
Issue 4.
The validity of this certificate depends on the validity of the main certificate.

Authorised by

SGS United Kingdom Ltd
Rossmore Business Park, Ellesmere Port, Cheshire, CH65 3EN, UK
t +44 (0)151 350 6666 - www.sgs.com

This document is issued by the Company subject to its General Conditions of Certification Services accessible at www.sgs.com/terms_and_conditions.htm. Attention is drawn to the limitations of liability, indemnification and jurisdictional issues established therein. The authenticity of this document may be verified at http://www.sgs.com/certified-clients-and-products/certified-client-directory. Any unauthorised alteration, forgery or falsification of the content or appearance of this document is unlawful and offenders may be prosecuted to the fullest extent of the law.

Page 1 of 1

ISO 14001:2004

Contents

Heat Shrink Cable Accessories 7

Terminations

RST Heat Shrink LV Terminations 8
RSNY/RSWY Heat Shrink MV Terminations 9

Joints

RSJ Heat Shrink LV Joints 14
RSJY Heat Shrink MV Joints 15

Heat Shrink Tubes

WRSJG Heat Shrink Anti-tracking Insulation Tube 18
WDWT Heat Shrink Semi-conductive/Insulation Dual Layer Tube 20
WRSHJG Heat Shrink Insulation Tube 21
WRSHG Heat Shrink Protective Tube 22
WRSYL Heat Shrink Stress Control Tube 24
WRSBG Heat Shrink Semi-conductive Tube 25
WRSGY Heat Shrink Oil Resistant Tube 26
WRSGG Heat Shrink Silicone Rubber Tube 27
WRSLD Heat Shrink Neoprene Tube 28
WRSXP Heat Shrink Repair Sleeve 29
WMPG Heat Shrink Busbar Tube 30

Heat Shrink Moulded Shapes

WRSZT Heat Shrink Breakout 33
WRSZT6 Heat Shrink 6-Core Breakout 35
WRSFM Heat Shrink Cable End Cap 36
AC Heat Shrink Anode Cap 37
WRSSQ Heat Shrink Anti-tracking Rain Shed 38
WRSRS Heat Shrink Anti-tracking Rain Shed 39
WRSJX Heat Shrink Right Angle/In-line Bushing Boot 40
WRSFT Cable End Enclosure 41
WRSLT Heat Shrink Cable Entry Seal 42
WRSY Heat Shrink Y-type Tube 43
Z11 Heat Shrink Cable Straight Boot 45
W11 Heat Shrink Right Angled Boot 46
C21 Heat Shrink 2-Way Outlet Shapes 47
C31 Heat Shrink 3-Way Outlet Shapes 48
C41 Heat Shrink 4-Way Outlet Shapes 49

Cold Shrink Cable Accessories 50

Terminations

WLN/WLW Cold Shrink Termination 51

Joints

WLJ Cold Shrink Joint 53

Cold Shrink Tubes

WCST Cold Shrink Silicone Rubber Tube 55
WEPDMC Cold Shrink EPDM Tube 56

Cold Shrink Moulded Shapes

WCSF Cold Shrink Silicone Rubber Breakout 57
WCSEC Cold Shrink End Cap 58

Cold Applied Cable Accessories 59

WSKG Silicone Rubber Overhead Line Cover 60
WRKG Overhead Line Cover 61
WBH Silicone Rubber Protective Cover 62
WRSJB Busbar Cover 63
WEYB Roll-On Sealing Tube 64
WESRT Electronic Silicone Rubber Tube 65
WCAB Cold Applied Insulation Boot 67

KEMA Certification 68

Heat Shrink Cable Accessories

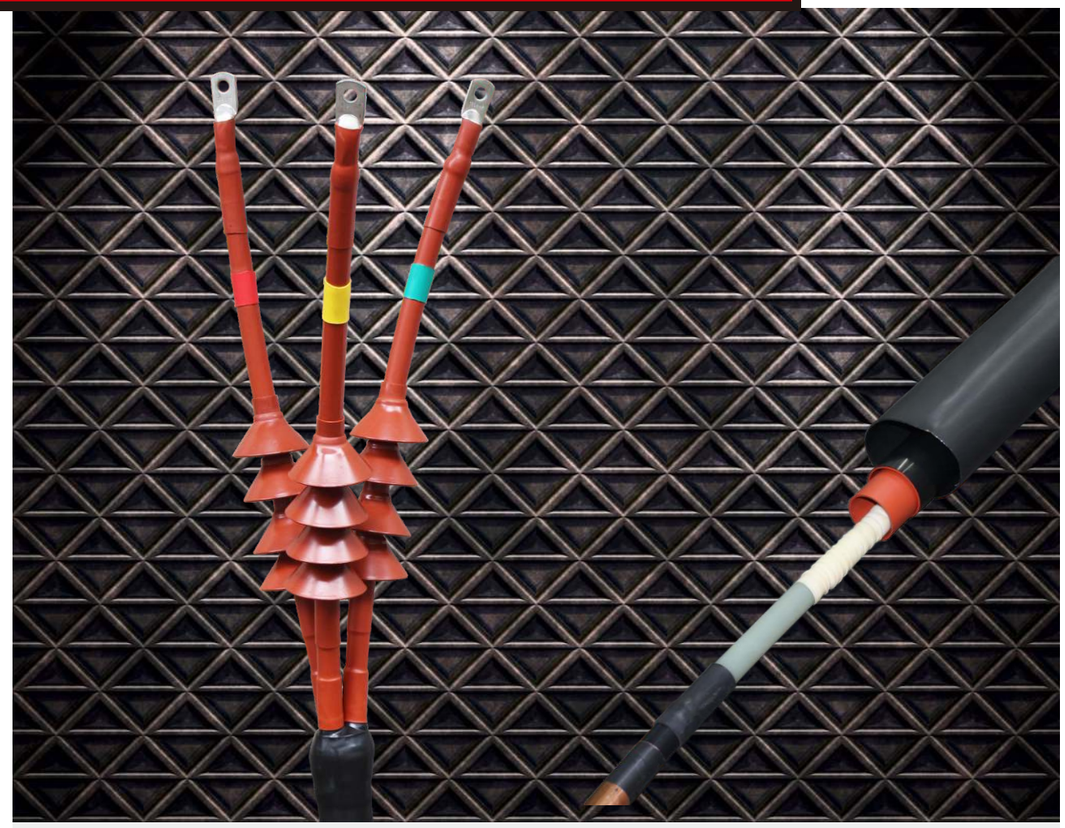

Heat shrink cable accessories are made of rubber/plastic composites. After exposure to radiation, the semi-finished product is heated and stretched to expand its dimension. It is then rapidly cooled in order to keep its shape. When installing, the cable accessories will shrink back down to the original dimensions by applying heating because of their "shape memory effect". Therefore, the heat shrink cable accessories will provide excellent insulation, sealing and mechanical protection for power cables.

RST
Heat Shrink Termination for LV Cables

Termination kit for 4-core cables

The terminations are designed for 1-, 2-, 3-, 4- and 5-core cables with or without armour. The terminations are also applicable to 3+1, 4+1 and 3+2 cables.

The cable crutch is sealed by a breakout inner coated with adhesive. Heat shrink insulation tubes seal between the cable lug and the bottom of the core insulation. For single core cables only an insulation tube is needed. All materials are resistant to UV and weathering.

Selection Table

Voltage	Cores	Cross Section/mm²	Kit No.
0.6/1(1.2)kV	1,2,3,4,5	4-6	0.6/1kVRST-4(5,3,2)/(-1)
		10-16	0.6/1kVRST-4(5,3,2)/0
		25-50	0.6/1kVRST-4(5,3,2,1)/1
		70-120	0.6/1kVRST-4(5,3,2,1)/2
		150-240	0.6/1kVRST-4(5,3,2,1)/3
		300-400	0.6/1kVRST-4(5,3,2,1)/4
		500	0.6/1kVRST-4(3,2,1)/5

Note:

Solderless earth connection system for armoured cables is available on request.

Lugs and other accessories shall be ordered separately.

Terminations and components for other cable types are available on request.

RSNY/RSWY
Heat Shrink Termination For MV Cables Up To 42kV

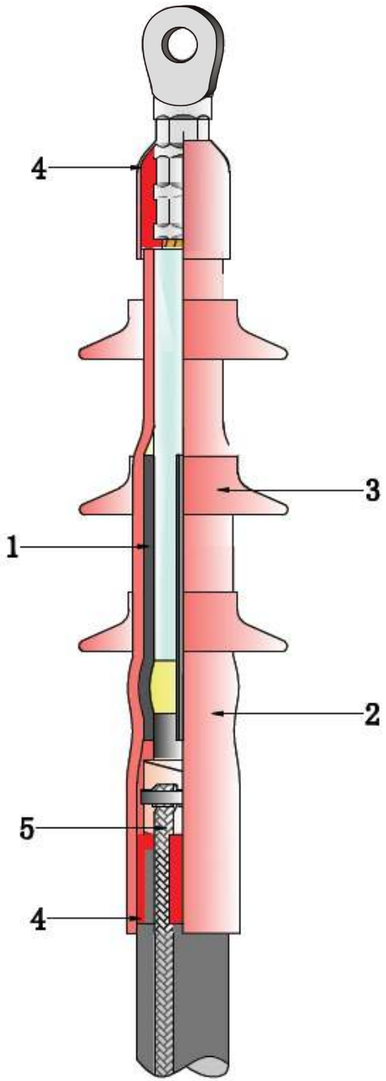

Design of Termination

Woer provides a universal system for indoor and outdoor terminations applicable to paper or polymeric insulated cables.

1. Electrical Stress Control

Yellow stress relief mastic is laid around the end of the screen cut. Stress control tube, together with stress relief mastic, is used to smooth out the electrical field at the cable end.

2. Excellent Anti-tracking Properties

Anti-tracking insulation tubes and rain sheds demonstrate excellent tracking and erosion resistance. This protect Woer terminations from tracking even in severe service conditions.

3. Additional Creepage

Anti-tracking rain sheds lengthen surface creepage distance.

4. Moisture Sealing

Durable sealing is achieved by hot-melted adhesive inside the sealing tube and anti-tracking insulation tube. For 3-core cables, the crutch area is sealed and protected with an adhesive-coated breakout which is installed over the cores and the end of oversheath.

5. Earth Connection

Either soldering or solderless earth connection is available to connect metal screen or armour to ground. For cables with wire screen, copper wires are imbedded in the sealing mastic to prevent any corrosion and moisture sealing.

RSNY-1
Indoor termination for screened, 1-core polymeric insulated cables 6kV, 10kV, 20kV, 30kV and 35kV

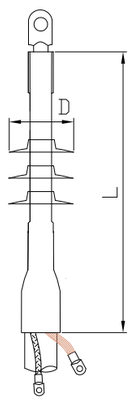

The indoor termination is designed for screened single core polymeric insulated MV cables up to 35kV.

Yellow stress relief mastic is laid around the end of the screen cut. Stress control tube, together with stress relief mastic, is used to smooth out the electrical field at the cable screen end. Anti-tracking insulation tube and sealing tube seal between the end of the oversheath and the cable lug. Anti-tracking rain sheds lengthen surface creepage distance to ensure safety.

Nominal voltage $U_0/U(U_m)$	Cross section (mm^2)	Kit No.	Dimensions(mm)		No. of rain sheds
			L	D	
3.6 / 6(7.2)kV	50-120 150-240 300-400 500	6kVRSNY-1/1 6kVRSNY-1/2 6kVRSNY-1/3 6kVRSNY-1/4	800	–	0
6 / 10(12)kV 6.35 / (11)12kV	50-95 120-185 240-300 400-500 630	10kVRSNY-1/1 10kVRSNY-1/2 10kVRSNY-1/3 10kVRSNY-1/4 10kVRSNY-1/5	800	–	0
8.7 / (15)17.5kV	25-50 70-120 150-240 300-400 500-630	10kVRSNY-1/1 10kVRSNY-1/2 10kVRSNY-1/3 10kVRSNY-1/4 10kVRSNY-1/5	800	–	0
12 / 20(24)kV 12.7 / 22(24)kV	35-50 70-120 150-240 300-400 500-630 800-1000 1200	20kVRSNY-1/1 20kVRSNY-1/2 20kVRSNY-1/3 20kVRSNY-1/4 20kVRSNY-1/5 20kVRSNY-1/6 20kVRSNY-1/7	800	105 105 105 140 140 140 140	2
18 / 30(36)kV 19 / 33(36)kV	35-50 70-120 150-240 300-400 500-630 800-1000 1200	30kVRSNY-1/1 30kVRSNY-1/2 30kVRSNY-1/3 30kVRSNY-1/4 30kVRSNY-1/5 30kVRSNY-1/6 30kVRSNY-1/7	800	105 105 140 140 140 140 140	4
20.8 / 36(42)kV 26 / 35(42)kV	50 70-120 150-240 300-400 500-630 800-1000 1200	35kVRSNY-1/1 35kVRSNY-1/2 35kVRSNY-1/3 35kVRSNY-1/4 35kVRSNY-1/5 35kVRSNY-1/6 35kVRSNY-1/7	800	140 140 140 140 140 140 140	4

Note:

1.Lugs need to be ordered separately.

2.RSNY-1 is for cables with copper wire screen without armour.

3.For cables with other construction ,please order kits separately.

Remark:Above cross-section range selection is for reference, the final determination factor is the diameter over insulation.

RSWY-1

Outdoor termination for screened, 1-core polymeric insulated cables 6kV, 10kV, 20kV, 30kV and 35kV

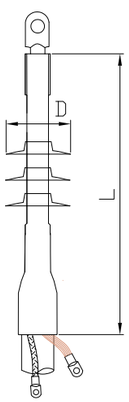

The outdoor termination is designed for screened single core polymeric insulated MV cables up to 35kV.

Yellow stress relief mastic is laid around the end of the screen cut. Stress control tube, together with stress relief mastic, is used to smooth out the electrical field at the cable screen end. Anti-tracking insulation tube and sealing tube seal between the end of the oversheath and the cable lug. Anti-tracking rain sheds lengthen surface creepage distance to ensure safety.

Nominal voltage $U_0/U(U_m)$	Cross section (mm^2)	Kit No.	Dimensions(mm)		No. of rain sheds
			L	D	
3.6 / 6(7.2)kV	50-120 150-240 300-400 500	6kVRSWY-1/1 6kVRSWY-1/2 6kVRSWY-1/3 6kVRSWY-1/4	800	105 105 105 140	3
6 / 10(12)kV 6.35 / (11)12kV	50-95 120-185 240-300 400-500 630	10kVRSWY-1/1 10kVRSWY-1/2 10kVRSWY-1/3 10kVRSWY-1/4 10kVRSWY-1/5	800	105 105 105 140 140	3
8.7 / (15)17.5kV	25-50 70-120 150-240 300-400 500-630	10kVRSWY-1/1 10kVRSWY-1/2 10kVRSWY-1/3 10kVRSWY-1/4 10kVRSWY-1/5	800	105 105 105 140 140	3
12 / 20(24)kV 12.7 / 22(24)kV	35-50 70-120 150-240 300-400 500-630 800-1000 1200	20kVRSWY-1/1 20kVRSWY-1/2 20kVRSWY-1/3 20kVRSWY-1/4 20kVRSWY-1/5 20kVRSWY-1/6 20kVRSWY-1/7	800	105 105 105 140 140 140 140	4
18 / 30(36)kV 19 / 33(36)kV	35-50 70-120 150-240 300-400 500-630 800-1000 1200	30kVRSWY-1/1 30kVRSWY-1/2 30kVRSWY-1/3 30kVRSWY-1/4 30kVRSWY-1/5 30kVRSWY-1/6 30kVRSWY-1/7	800	105 105 140 140 140 140 140	6
20.8 / 36(42)kV 26 / 35(42)kV	50 70-120 150-240 300-400 500-630 800-1000 1200	35kVRSWY-1/1 35kVRSWY-1/2 35kVRSWY-1/3 35kVRSWY-1/4 35kVRSWY-1/5 35kVRSWY-1/6 35kVRSWY-1/7	800	140 140 140 140 140 140 140	6

Note:
1.Lugs need to be ordered separately.
2.RSWY-1 is for cables with copper wire screen without armour.
3.For cables with other construction ,please order kits separately.
Remark:Above cross-section range selection is for reference, the final determination factor is the diameter over insulation.

RSNY-3

Indoor termination for screened, 3-core polymeric insulated cables 6kV, 10kV, 20kV, 30kV and 35kV

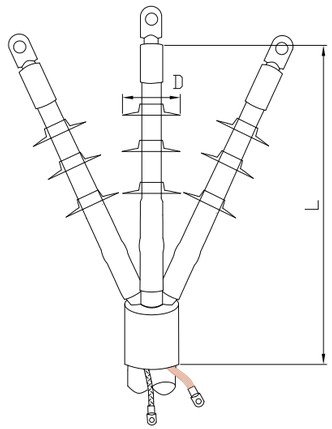

The indoor termination is designed for screened three core polymeric insulated MV cables up to 35kV.

Yellow stress relief mastic is laid around the end of the screen cut. Stress control tube, together with stress relief mastic, is used to smooth out the electrical field at the cable screen end. All phase cores are covered with anti-tracking insulation tube and sealing tube. Anti-tracking rain sheds lengthen surface creepage distance to ensure safety. The crutch area is sealed and protected with an adhesive-coated breakout which is installed over the cores at the end of oversheath.

Nominal voltage $U_0/U(U_m)$	Cross section (mm^2)	Kit No.	Dimensions(mm)		No. of rain sheds
			L	D	
3.6 / 6(7.2)kV	50-120 150-240 300-400 500	6kVRSNY-3/1 6kVRSNY-3/2 6kVRSNY-3/3 6kVRSNY-3/4	750	–	0
6 / 10(12)kV 6.35 / (11)12kV	50-95 120-185 240-300 400-500 630	10kVRSNY-3/1 10kVRSNY-3/2 10kVRSNY-3/3 10kVRSNY-3/4 10kVRSNY-3/5	750	–	0
8.7 / (15)17.5kV	25-50 70-120 150-240 300-400 500-630	10kVRSNY-3/1 10kVRSNY-3/2 10kVRSNY-3/3 10kVRSNY-3/4 10kVRSNY-3/5	750	–	0
12 / 20(24)kV 12.7 / 22(24)kV	35-50 70-120 150-240 300-400 500-630	20kVRSNY-3/1 20kVRSNY-3/2 20kVRSNY-3/3 20kVRSNY-3/4 20kVRSNY-3/5	900	105 105 105 140 140	6
18 / 30(36)kV 19 / 33(36)kV	35-50 70-120 150-240 300-400 500-630	30kVRSNY-3/1 30kVRSNY-3/2 30kVRSNY-3/3 30kVRSNY-3/4 30kVRSNY-3/5	1100	105 105 140 140 140	12
20.8 / 36(42)kV 26 / 35(42)kV	50 70-120 150-240 300-400 500-630	35kVRSNY-3/1 35kVRSNY-3/2 35kVRSNY-3/3 35kVRSNY-3/4 35kVRSNY-3/5	1100	140 140 140 140 140	12

Note:
1.Lugs need to be ordered separately.
2.RSNY-3 is for cables with copper wire screen without armour.
3.For cables with other construction ,please order kits separately.
Remark:Above cross-section range selection is for reference, the final determination factor is the diameter over insulation.

RSWY-3
Outdoor termination for screened, 3-core polymeric insulated cables 6kV, 10kV, 20kV, 30kV and 35kV

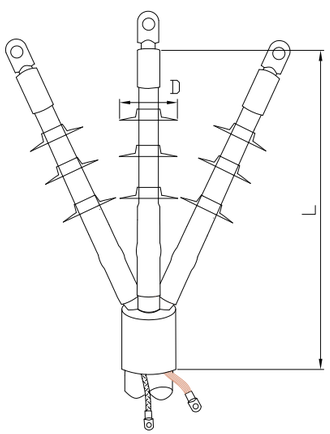

The outdoor termination is designed for screened three core polymeric insulated MV cables up to 35kV.

Yellow stress relief mastic is laid around the end of the screen cut. Stress control tube, together with stress relief mastic, is used to smooth out the electrical field at the cable screen end. All phase cores are covered with anti-tracking insulation tube and sealing tube. Anti-tracking rain sheds lengthen surface creepage distance to ensure safety. The crutch area is sealed and protected with an adhesive-coated breakout which is installed over the cores and the end of oversheath.

Nominal voltage $U_0/U(U_m)$	Cross section (mm^2)	Kit No.	Dimensions(mm)		No. of rain sheds
			L	D	
3.6 / 6(7.2)kV	50-120 150-240 300-400 500	6kVRSWY-3/1 6kVRSWY-3/2 6kVRSWY-3/3 6kVRSWY-3/4	900	105 105 105 105	6
6 / 10(12)kV 6.35 / (11)12kV	50-95 120-185 240-300 400-500 630	10kVRSWY-3/1 10kVRSWY-3/2 10kVRSWY-3/3 10kVRSWY-3/4 10kVRSWY-3/5	900	105 105 105 105 105	6
8.7 /(15)17.5kV	25-50 70-120 150-240 300-400 500-630	10kVRSWY-3/1 10kVRSWY-3/2 10kVRSWY-3/3 10kVRSWY-3/4 10kVRSWY-3/5	900	105 105 105 105 105	6
12 / 20(24)kV 12.7 / 22(24)kV	35-50 70-120 150-240 300-400 500-630	20kVRSWY-3/1 20kVRSWY-3/2 20kVRSWY-3/3 20kVRSWY-3/4 20kVRSWY-3/5	900	105 105 105 140 140	12
18 / 30(36)kV 19 / 33(36)kV	35-50 70-120 150-240 300-400 500-630	30kVRSWY-3/1 30kVRSWY-3/2 30kVRSWY-3/3 30kVRSWY-3/4 30kVRSWY-3/5	1100	105 105 140 140 140	18
20.8 / 36(42)kV 26 / 35(42)kV	50 70-120 150-240 300-400 500-630	35kVRSWY-3/1 35kVRSWY-3/2 35kVRSWY-3/3 35kVRSWY-3/4 35kVRSWY-3/5	1100	140 140 140 140 140	18

Note:
1.Lugs need to be ordered separately.
2.RSWY-3 is for cables with copper wire screen without armour.
3.For cables with other construction ,please order kits separately.
Remark:Above cross-section range selection is for reference, the final determination factor is the diameter over insulation.

RSJ
Heat Shrink Joints for LV Cables

Joint Kit for LV 4-core Cable

The joints are designed for 1-, 2-, 3-, 4- and 5-core cables with or without armour. The joints are also applicable to 3+1, 4+1 and 3+2 cables.

The connectors are insulated and sealed with adhesive coated insulation tubes. The outer tube provides mechanical protection and chemical resistance as expected from cable oversheath. All joints are designed to allow crossing of cable cores.

Selection Table

Voltage $U_0/U(U_m)$	Cores	Cross Section/mm^2	Kit No.
0.6/1(1.2)kV	4, 5, 3, 2, 1	4-6 10-16 25-50 70-120 150-240 300-400 500	0.6/1kVRSJ-4(5,3,2)/(-1) 0.6/1kVRSJ-4(5,3,2)/0 0.6/1kVRSJ-4(5,3,2,1)/1 0.6/1kVRSJ-4(5,3,2,1)/2 0.6/1kVRSJ-4(5,3,2,1)/3 0.6/1kVRSJ-4(5,3,2,1)/4 0.6/1kVRSJ-4(3,1)/5

Note:
1. Joints and components for other cable types are available on request.
2. Solderless earth connection system for armoured cables is available on request.
3. Connectors and other accessories need to be ordered separately.

RSJY
Heat Shrink Joints For MV Cables Up To 42kV

Design of Joint

The joints are designed for MV screened, 1-core polymeric insulated cables with or without armour. The same design principles are used for 3-core cables.

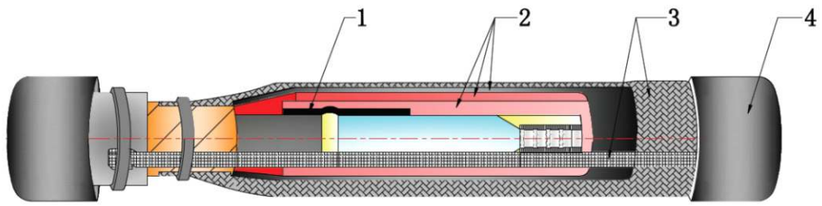

1. Electrical stress control

Stress control tube, together with stress relief mastic, is used to smooth out the electrical field at the cable screen ends.

2. Insulation and screen

Heat shrink insulation tube delivers consistent insulation thickness to meet or exceed that of the cable.

Heat shrink semi-conductive /insulation dual layer tube is also adopted to help ensure a void-free interface between the insulation and screen.

3. Metallic shielding

Copper mesh wrapped around the joint area rebuilds the metallic screen. Either soldering or solderless earth connection is available to provide screen continuity across the joint.

4. Outer sealing and protection

The outer sealing and protection is performed by an adhesive coated heat shrink tube. It provides mechanical protection and chemical resistance as expected from cable oversheath.

RSJY-1
Straight joint for screened, 1-core polymeric insulated cables 6kV, 10kV, 20kV, 30kV and 35kV

The joint is designed for screened single core polymeric insulated MV cables up to 35kV.

Stress control tube, together with stress relief mastic, is used to smooth out the electrical field at the cable screen ends. Heat shrink insulation tube delivers consistent insulation thickness over the core insulation. Heat shrink dual layer tube is adopted to help ensure a void-free interface between the insulation and screen. Copper mesh wrapped around the joint area rebuilds the metallic screen. Either soldering or solderless earth connection is available to provide screen continuity across the joint. The outer sealing and protection is performed by an adhesive coated heat shrink tube.

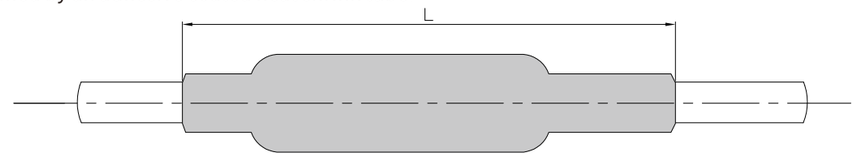

Selection Table

Nominal voltage $U_0/U(U_m)$	Cross section (mm^2)	Kit No.	L Dimensions(mm)
3.6 / 6(7.2)kV	50-120 150-240 300-400 500	6kVRSJY-1/1 6kVRSJY-1/2 6kVRSJY-1/3 6kVRSJY-1/4	1000 1000 1000 1000
6 / 10(12)kV 6.35 / (11)12kV	50-95 120-185 240-300 400-500 630	10kVRSJY-1/1 10kVRSJY-1/2 10kVRSJY-1/3 10kVRSJY-1/4 10kVRSJY-1/5	1000 1000 1000 1000 1000
8.7 / (15)17.5kV	25-50 70-120 150-240 300-400 500-630	10kVRSJY-1/1 10kVRSJY-1/2 10kVRSJY-1/3 10kVRSJY-1/4 10kVRSJY-1/5	1000 1000 1000 1000 1000
12 / 20(24)kV 12.7 / 22(24)kV	35-50 70-120 150-240 300-400 500-630 800-1000 1200	20kVRSJY-1/1 20kVRSJY-1/2 20kVRSJY-1/3 20kVRSJY-1/4 20kVRSJY-1/5 20kVRSJY-1/6 20kVRSJY-1/7	1000 1000 1000 1200 1200 1200 1200
18 / 30(36)kV 19 / 33(36)kV	35-50 70-120 150-240 300-400 500-630 800-1000 1200	30kVRSJY-1/1 30kVRSJY-1/2 30kVRSJY-1/3 30kVRSJY-1/4 30kVRSJY-1/5 30kVRSJY-1/6 30kVRSJY-1/7	1400 1400 1400 1400 1400 1400 1400
20.8 / 36(42)kV 26 / 35(42)kV	50 70-120 150-240 300-400 500-630 800-1000 1200	35kVRSJY-1/1 35kVRSJY-1/2 35kVRSJY-1/3 35kVRSJY-1/4 35kVRSJY-1/5 35kVRSJY-1/6 35kVRSJY-1/7	1400 1400 1400 1500 1500 1500 1500

Note:
1.Connectors need to be ordered separately.
2.RSJY-1 is for cables with copper wire screen without armour.
3.For cables with other construction ,please order kits separately.
Remark:Above cross-section range selection is for reference, the final determination factor is the diameter over insulation

RSJY-3
Straight joint for screened, 3-core polymeric insulated cables 6kV, 10kV, 20kV, 30kV and 35kV

The joint is designed for screened three core polymeric insulated MV cables up to 35kV.

Stress control tube, together with stress relief mastic, is used to smooth out the electrical field at the cable screen ends. Heat shrink insulation tube delivers consistent insulation thickness over the core insulation. Heat shrink dual layer tube is adopted to help ensure a void-free interface between the insulation and screen. Copper mesh wrapped around the joint area rebuilds the metallic screen. Either soldering or solderless earth connection is available to provide screen continuity across the joint. The outer sealing and protection is performed by an adhesive coated heat shrink tube.

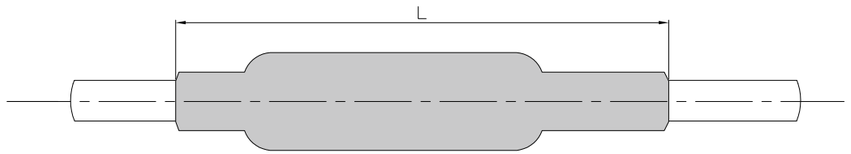

Selection Table

Nominal voltage $U_0/U(U_m)$	Cross section (mm^2)	Kit No.	L Dimensions(mm)
3.6 / 6(7.2)kV	50-120 150-240 300-400 500	6kVRSJY-3/1 6kVRSJY-3/2 6kVRSJY-3/3 6kVRSJY-3/4	1800 1800 1800 1800
6 / 10(12)kV 6.35 / (11)12kV	50-95 120-185 240-300 400-500 630	10kVRSJY-3/1 10kVRSJY-3/2 10kVRSJY-3/3 10kVRSJY-3/4 10kVRSJY-3/5	1800 1800 1800 1800 1800
8.7 / (15)17.5kV	25-50 70-120 150-240 300-400 500-630	10kVRSJY-3/1 10kVRSJY-3/2 10kVRSJY-3/3 10kVRSJY-3/4 10kVRSJY-3/5	1800 1800 1800 1800 1800
12 / 20(24)kV 12.7 / 22(24)kV	35-50 70-120 150-240 300-400 500-630	20kVRSJY-3/1 20kVRSJY-3/2 20kVRSJY-3/3 20kVRSJY-3/4 20kVRSJY-3/5	1800 1800 1800 2600 2600
18 / 30(36)kV 19 / 33(36)kV	35-50 70-120 150-240 300-400 500-630	30kVRSJY-3/1 30kVRSJY-3/2 30kVRSJY-3/3 30kVRSJY-3/4 30kVRSJY-3/5	2700 2700 2700 2700 2700
20.8 / 36(42)kV 26 / 35(42)kV	50 70-120 150-240 300-400 500-630	35kVRSJY-3/1 35kVRSJY-3/2 35kVRSJY-3/3 35kVRSJY-3/4 35kVRSJY-3/5	2700 2700 2700 2800 2800

Note:
1.Connectors need to be ordered separately.
2.RSJY-3 is for cables with copper wire screen without armour.
3.For cables with other construction ,please order kits separately.
Remark:Above cross-section range selection is for reference, the final determination factor is the diameter over insulation

WRSJG
Heat Shrink Anti-tracking Insulation Tube

- Manufactured from cross linked polyolefin, inner coated with adhesive at one end.
- Protecting against accidental flashover.
- Used in medium voltage cable terminations up to 42 kV.
- Shrink temperature: start at 90°C, and fully recovered at 130°C.
- Color: red.

Selection Table

Spec.	As Supplied/mm		After Recovered/mm		Standard Cut Length /mm	Standard Continuous Length (m/roll)
	Inner Diameter Min	Wall Thickness (±0.3)	Inner Diameter Max	Wall Thickness (±0.3)		
WRSJG-30/12	30	1.0	12	2.2	600-1200	25
WRSJG-35/14	35	1.0	14	2.3	600-1200	25
WRSJG-40/17	40	1.0	17	2.3	600-1200	25
WRSJG-50/22	50	1.0	22	2.5	600-1200	25
WRSJG-35/13	35	1.2	13	3.0	600-1200	25
WRSJG-40/15	40	1.2	15	3.0	600-1200	25
WRSJG-50/19	50	1.1	19	3.0	600-1200	25
WRSJG-55/24	55	1.4	24	3.2	600-1200	15
WRSJG-60/26	60	1.4	26	3.2	600-1200	15
WRSJG-70/29	70	1.4	29	3.2	600-1200	15
WRSJG-75/35	75	1.5	35	3.2	600-1200	15
WRSJG-80/36	80	1.4	36	3.2	600-1200	15
WRSJG-90/41	90	1.6	41	3.5	600-1200	15
WRSJG-100/45	100	1.5	45	3.5	600-1200	15

Technical Data

Property	Test Method	Standard Value
Tensile Strength	ASTM-D-638	⩾8MPa
Elongation at Break	ASTM-D-638	⩾300%
Tensile Strength Variation After Heat Aging (130°Cx168h)	ASTM-D-5510	⩽±30%
Elongatiion at Break Variation After Heat Aging (130°Cx168h)	ASTM-D-5510	⩽±30%
Volume Resistivity	IEC 60093	⩾1x10^{14}Ω.cm
Dielectric Strength	IEC 60243	⩾20kV/mm
Tracking Resistance	IEC 60587	1A 3.5
Dielectric Constant	IEC 60250	⩽5
Heat Shock	160°C，4h	No Crack
Water Absorption (23±2)°C 24h	ISO 62	⩽0.1%
Hardness（Shore A）	ISO 868	⩾80
Brittle Temperature	ISO 974	-40°C

WDWT

Heat Shrink Semi-conductive/Insulation Dual Layer Tube

- The red inner layer is made of insulation material to provide good insulation.
- The black outer layer is made of semi-conductive material to provide electrical shielding.
- Suitable for applications in medium voltage cable joints up to 42 kV.
- Shrink temperature: start at 90°C, and fully recovered at 130°C.

Selection Table

Spec.	As Supplied/mm		After Recovered/mm		Standard Length /mm
	Inner Diameter Min	Wall Thickness (±20%)	Inner Diameter Max	Wall Thickness (±10%)	
WDWT-30/12	30	2.8	12	5.8	300-1000
WDWT-35/13	35	2.5	13	5.8	300-1000
WDWT-45/17	45	2.3	17	5.8	300-1000
WDWT-55/21	55	2.2	21	5.8	300-1000
WDWT-65/26	65	2.3	26	5.8	300-1000
WDWT-85/30	85	2.7	30	7.2	300-1000
WDWT-100/38	100	2.9	38	7.2	300-1000
WDWT-120/45	120	2.9	45	7.2	300-1000

Technical Data

Technical Data-Inner Insulation

Property	Test Method	Standard Value
Tensile Strength	ASTM-D-638	⩾10MPa
Elongation at Break	ASTM-D-638	⩾350%
Tensile Strength Variation After Heat Aging（130°Cx168h）	ASTM-D-5510	⩽±20%
Elongatiion at Break Variation After Heat Aging（130°Cx168h）	ASTM-D-5510	⩽±20%
Volume Resistivity	IEC 60093	⩾1x10^{14}Ω.cm
Dielectric Strength	IEC 60243	⩾20kV/mm
Dielectric Constant	IEC 60250	⩽4
Brittle Temperature	ISO 974	-40°C
Hardness（Shore A）	ISO 868	⩾80
Heat Shock	160°C，4h	No Crack
Longitudinal Shrinkage	ASTM-D-2671	⩽10%
Eccentricity	ASTM-D-2671	⩽30%

Technical Data-Outer Semi-conductive

Property	Test Method	Standard Value
Tensile Strength	ASTM-D-638	⩾10MPa
Elongation at Break	ASTM-D-638	⩾350%
Tensile Strength Variation After Heat Aging（130°Cx168h）	ASTM-D-5510	⩽±20%
Elongatiion at Break Variation After Heat Aging（130°Cx168h）	ASTM-D-5510	⩽±20%
Volume Resistivity	IEC 60093	⩾1x10^{3}Ω.cm
Hardness（Shore A）	ISO 868	⩾80
Heat Shock	160°C，4h	No Crack
Brittle Temperature	ISO 974	-40°C
Longitudinal Shrinkage	ASTM-D-2671	⩽10%
Eccentricity	ASTM-D-2671	⩽30%

WRSHJG
Heat Shrink Insulation Tube

- Manufactured from cross linked polyolefin.
- Used in MV cable joints to provide electrical insulation up to 42 kV.
- Shrink temperature: start at 90°C, and fully recovered at 130°C.
- Color: red.

Selection Table

Spec.	As Supplied/mm		After Recovered/mm		Standard Length /mm
	Inner Diameter Min	Wall Thickness (±20%)	Inner Diameter Max	Wall Thickness (±10%)	
WRSHJG-30/12	30	1.6	12	3.6	500-850
WRSHJG-35/14	35	1.7	14	3.7	500-850
WRSHJG-40/17	40	1.7	17	3.7	500-850
WRSHJG-45/18	45	1.6	18	3.7	500-850
WRSHJG-50/22	50	1.7	22	3.7	500-850
WRSHJG-55/25	55	1.7	25	3.7	500-850
WRSHJG-55/22	55	2.6	22	5.5	500-850
WRSHJG-60/25	60	2.6	25	5.5	500-850
WRSHJG-65/26	65	2.4	26	5.5	500-850
WRSHJG-70/29	70	2.6	29	5.5	500-850
WRSHJG-80/35	80	2.7	35	5.5	500-850
WRSHJG-85/38	85	2.7	38	5.5	500-850
WRSHJG-90/39	90	2.5	39	5.5	500-850
WRSHJG-100/42	100	2.4	42	5.5	500-850

Technical Data

Property	Test Method	Standard Value
Tensile Strength	ASTM-D-638	⩾10MPa
Elongation at Break	ASTM-D-638	⩾350%
Tensile Strength Variation After Heat Aging (130°Cx168h)	ASTM-D-5510	⩽±20%
Elongatiion at Break Variation After Heat Aging (130°Cx168h)	ASTM-D-5510	⩽±20%
Volume Resistivity	IEC 60093	⩾1x10^{14}Ω.cm
Dielectric Strength	IEC 60243	⩾20kV/mm
Dielectric Constant	IEC 60250	⩽4
Brittle Temperature	ISO 974	-40°C
Hardness（Shore A）	ISO 868	⩾80
Heat Shock	160°C，4h	No Crack
Longitudinal Shrinkage	ASTM-D-2671	⩽10%
Eccentricity	ASTM-D-2671	⩽30%

WRSHG
Heat Shrink Protective Tube

- Manufactured from cross linked polyolefin.
- Providing outer sealing protection for power cable joints up to 42kV.
- Used in 1kV cable joints and terminations to provide electrical insulation (Φ50 and below).
- Outstanding abrasion and chemical resistance.
- Inner coated with adhesive at both ends. Tubes inner coated with adhesive at full length are available upon customer request.
- Shrink temperature: start at 90°C, and fully recovered at 130°C Color: black, red, yellow, blue, green(Φ50 and below); black only(above Φ50). Other colors are available upon customer request.

Selection Table

Spec.	As Supplied/mm		After Recovered/mm		Standard Cut Length /mm	Standard Continuous Length (m/roll)
	Inner Diameter Min	Wall Thickness (±0.2)	Inner Diameter Max	Wall Thickness (±0.3)		
WRSHG-10/5	10	0.5	5	1.1	275-1000	25
WRSHG-15/7	15	0.5	7	1.1	275-1000	25
WRSHG-20/9	20	0.6	9	1.5	275-1000	25
WRSHG-30/11	30	0.7	11	1.6	275-1000	25
WRSHG-35/13	35	0.7	13	1.8	275-1000	25
WRSHG-45/17	45	0.8	17	2.0	275-1000	25
WRSHG-50/23	50	1.1	23	2.5	800-1200	25
WRSHG-60/23	60	1.0	23	2.5	800-1200	25
WRSHG-85/30	85	1.0	30	2.8	800-1200	25
WRSHG-100/39	100	1.1	39	3.0	800-1200	15
WRSHG-120/45	120	1.1	45	3.0	800-1200	15
WRSHG-140/49	140	1.2	49	3.6	800-1200	15
WRSHG-160/57	160	1.2	57	3.6	800-1200	/
WRSHG-180/61	180	1.3	61	4.0	800-1200	/
WRSHG-200/70	200	1.5	70	4.4	800-1200	/
WRSHG-230/72	220	1.4	72	4.4	800-1200	/
WRSHG-250/87	250	1.6	87	4.4	800-1200	/
WRSHG-300/100	290	1.4	100	4.4	800-1200	/

Technical Data

Property	Test Method	Standard Value
Tensile Strength	ASTM-D-638	⩾12MPa
Elongation at Break	ASTM-D-638	⩾300%
Volume Resistivity	IEC 60093	⩾1x10^{13}Ω.cm
Dielectric Strength	IEC 60243	⩾15kV/mm
Brittle Temperature	ISO 974	-40°C
Heat Shock	160°C，4h	No Crack
Water Absorption（23±2）°C 24h	ISO 62	⩽0.1%
Hardness（Shore A）	ISO 868	⩾80
Longitudinal Shrinkage	ASTM-D-2671	⩽5%
Eccentricity	ASTM-D-2671	⩽35%(Φ200 and below) ⩽55%(Above Φ200)

WRSYL
Heat Shrink Stress Control Tube

- Manufactured from cross linked polyolefin.
- Providing effective electrical stress control for MV cable terminations and joints up to 42 kV.
- Continuous operation temperature: -40°C to 100°C.
- Shrink temperature: start at 90°C, and fully recovered at 130°C.
- Color: black.

Selection Table

Spec.	As Supplied/mm		After Recovered/mm		Standard Cut Length /mm	Standard Continuous Length (m/roll)
	Inner Diameter Min	Wall Thickness (±0.3)	Inner Diameter Max	Wall Thickness (±0.3)		
WRSYL-30/11	30	0.8	11	2.0	100-1200	25
WRSYL-35/14	35	0.8	14	2.0	100-1200	25
WRSYL-40/17	40	0.8	17	2.0	100-1200	25
WRSYL-45/20	45	0.8	20	2.0	100-1200	25
WRSYL-50/22	50	1.2	22	2.6	100-1200	25
WRSYL-55/24	55	1.4	24	3.3	100-1200	15
WRSYL-60/29	60	1.3	29	3.3	100-1200	15
WRSYL-70/29	70	1.3	29	3.3	100-1200	15
WRSYL-80/29	80	1.2	29	3.3	100-1200	15
WRSYL-95/42	95	1.4	42	3.6	100-1200	15
WRSYL-100/43	100	1.3	43	3.6	100-1200	15
WRSYL-120/45	120	1.1	45	3.6	100-1200	15

Technical Data

Property	Test Method	Standard
Tensile Strength	ASTM-D-638	⩾10MPa
Elongation at Break	ASTM-D-638	⩾350%
Tensile Strength Variation After Heat Aging (130°Cx168h)	ASTM-D-5510	⩽±20%
Elongatiion at Break Variation After Heat Aging (130°Cx168h)	ASTM-D-5510	⩽±20%
Volume Resistivity	IEC 60093	⩾1x10^{10}Ω.cm
Dielectric Constant	IEC 60250	⩾15
Hardness（Shore A）	ISO 868	⩾80
Longitudinal Shrinkage	ASTM-D-2671	⩽5%
Eccentricity	ASTM-D-2671	⩽30%

WRSBG
Heat Shrink Semi-conductive Tube

- Manufactured from cross linked semi-conductive polyolefin.
- Shrink temperature: start at 90°C, and fully recovered at 130°C.
- Color: black.

Selection Table

Spec.	As Supplied/mm		After Recovered/mm		Standard Cut Length/mm	Standard Continuous Length (m/roll)
	Inner Diameter Min	Wall Thickness (±0.3)	Inner Diameter Max	Wall Thickness (±0.3)		
WRSBG-45/17	45	0.9	17	2.3	400-1200	25
WRSBG-50/20	50	0.9	20	2.3	400-1200	25
WRSBG-55/23	55	0.9	23	2.3	400-1200	25
WRSBG-60/24	60	0.9	24	2.3	400-1200	25
WRSBG-65/25	65	0.8	25	2.3	400-1200	25
WRSBG-75/29	75	1.0	29	2.7	400-1200	25
WRSBG-90/30	90	0.8	30	2.7	400-1200	25
WRSBG-100/36	100	0.9	36	2.7	400-1200	15
WRSBG-120/37	120	0.8	37	2.7	400-1200	15
WRSBG-150/55	150	0.8	55	3.4	400-1200	15

Technical Data

Property	Test Method	Standard Value
Tensile Strength	ASTM-D-638	⩾10MPa
Elongation at Break	ASTM-D-638	⩾350%
Tensile Strength Variation After Heat Aging (130°Cx168h)	ASTM-D-5510	⩽±20%
Elongatiion at Break Variation After Heat Aging (130°Cx168h)	ASTM-D-5510	⩽±20%
Volume Resistivity	IEC 60093	⩾1x10^{3}Ω.cm
Hardness（Shore A）	ISO 868	⩾80
Heat Shock	160°C，4h	No Crack
Brittle Temperature	ISO 974	-40°C
Longitudinal Shrinkage	ASTM-D-2671	⩽10%
Eccentricity	ASTM-D-2671	⩽30%

WRSGY
Heat Shrink Oil-resistant Tube

- Manufactured from cross-linked polyolefin.
- Mainly used in PILC cable terminations and joints, offering oil resistance, insulation and sealing protection.

Selection Table

Spec.	As Supplied/mm		After Recovered/mm		Standard Length /mm
	Inner Diameter Min	Wall Thickness (±0.3)	Inner Diameter Max	Wall Thickness (±0.3)	
WRSGY-20/8	20	0.7	8	1.8	300-1000
WRSGY-30/11	30	0.7	11	1.8	300-1000
WRSGY-35/12	35	0.7	12	2.0	300-1000
WRSGY-40/17	40	1.0	17	2.2	300-1000
WRSGY-50/22	50	1.7	22	3.7	300-1000
WRSGY-60/23	60	1.4	23	3.7	300-1000
WRSGY-75/29	75	1.1	29	2.8	300-1000
WRSGY-85/30	85	0.9	30	2.8	300-1000
WRSGY-100/38	100	1.1	38	3.0	300-1000
WRSGY-120/45	120	1.1	45	3.0	300-1000

Technical Data

Property	Test Method	Standard Value
Tensile Strength	ASTM-D-638	⩾10MPa
Elongation at Break	ASTM-D-638	⩾350%
Tensile Strength Variation After Heat Aging（130°Cx168h）	ASTM-D-5510	⩽±20%
Elongatiion at Break Variation After Heat Aging（130°Cx168h）	ASTM-D-5510	⩽±20%
Tensile Strength Variation After Oil Resistance (80°C Cable Oil，168hrs)	ASTM-D-538	⩽±20%
Elongatiion at Break Variation After Oil Resistance (80°C Cable Oil，168hrs)	ASTM-D-538	⩽±20%
Volume Resistivity	IEC 60093	⩾1x10^{14}Ω.cm
Dielectric Strength	IEC 60243	⩾20kV/mm
Dielectric Constant	IEC 60250	⩽4
Hardness（Shore A）	ISO 868	⩾80
Heat Shock	160°C，4h	No Crack

WRSGG
Heat Shrink Silicone Rubber Tube

- Made of silicone rubber.
- Used for insuation,proterction,and sheathing applications.
- Superior heat and cold resistance,flexibility,and electrical insulation.
- Standard color:Black and grey.
- Other colors are available upon request.

Selection Table

Spec.	As Supplied/mm		After Recovered/mm	
	Inner Diameter Min	Wall Thickness (±0.3)	Inner Diameter Max	Wall Thickness (±0.3)
WRSGG-6	6	0.55	3.6	1.0

Technical Data

Property	Test Method	Standard Value
Tensile Strength	ASTM-D-638	⩾4.5MPa
Elongation at Break	ASTM-D-638	⩾450%
Tear Strength	ISO 34	⩾20kN/m
Dielectric Strength	IEC60243	⩾20kV/mm
Volume Resistivity	IEC60093	⩾1×10^{12} Ω・cm

WRSLD
Heat Shrink Neoprene Tube

- Made of cross linked chlorinated polyolefin.
- Resistant to most fluids and solvents，including aviation and ground-vehicle fuels，lubricating oil，and hydraulic fluids.
- Good flexibility at low temperature.
- Resistant to abrasion and physical abuse while providing flexibility and strain relief.
- Performance meets requirements of SAE-AMS-DTL-23053/1.
- Widely used for insulation， strain relief， and abrasion protection on cable harnesses and wire bundles in the military and aerospace.
- Especially suitable for applications requiring expoure to fluids and solvents at elevated temperatures.
- RoHS compliant.
- Shrink temperature：start at 90°C，and fully recovered at 130°C.
- Standard color：black.

Technical Data

Property	Test Method	Standard Value
Tensile Strength	ASTM D 412	⩾10.3MPa
Elongation at Break	ASTM D 412	⩾225%
Tensile Strength at 200% elongation	ASTM D 412	⩽10.3MPa
Tensile Strength After Aging（120°C，168hrs）	SAE-AMS-DTL-23053	⩾8.3MPa
Elongation at Break After Aging（120°C，168hrs）	SAE-AMS-DTL-23053	⩾175%
Dielectric Strength	ASTM D 2671	⩾11.8kV/mm
Volume Resistivity	ASTM D 876	⩾$1x10^{11}$Ω.cm
Flammability (Self extinguishing 15seconds;3inches)	ASTM D2671,Procedure A	Pass
Fungus resistance	ASTM G 21	No growth
Low temperature flexibility	-70°C,4 hrs	No cracking

Selection Table

Product No.	As Supplied /mm	Recovered/mm	
		Inner Diameter	Wall thickness
WRSLD-3.2/1.5	⩾3.2	⩽1.5	0.7±0.2
WRSLD-4.8/2.5	⩾4.8	⩽2.5	0.8±0.2
WRSLD-6.4/3.4	⩾6.4	⩽3.4	0.9±0.2
WRSLD-9.5/5.4	⩾9.5	⩽5.4	1.0±0.2
WRSLD-12.7/7.1	⩾12.7	⩽7.1	1.2±0.3
WRSLD-1 6/8.7	⩾16	⩽8.7	1.3±0.3
WRSLD-19.1/10.5	⩾19.1	⩽10.5	1.4±0.3
WRSLD-22.2/12.5	⩾22.2	⩽12.5	1.7±0.3
WRSLD-25.4/14.5	⩾25.4	⩽14.5	1.8±0.3
WRSLD-31.8/18.0	⩾31.8	⩽18.0	2.2±0.3
WRSLD-38.1/21.5	⩾38.1	⩽21.5	2.4±0.3
WRSLD- 44.5/24	⩾44.5	⩽24.0	2.4±0.3

**Wall thickness will be less when shrinkage is restricted.

WRSXP
Heat Shrink Repair Sleeve

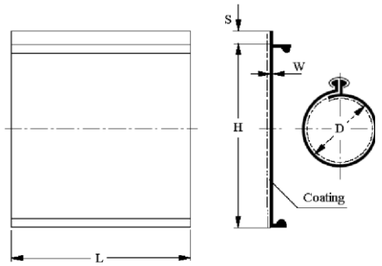

- Manufactured from polyolefin, inner coated with hot-melt adhesive.
- Providing fast and permanent repair and sealing protection for power cables.
- High tensile strength, abrasion and corrosion resistance.
- A corrosion proof metal channel is used to close the sleeve during installation.
- Shrink temperature: start at 90℃, and fully recovered at 130℃.

Selection Table

Spec.	As Supplied/mm		After Recovered/mm		Standard Length /mm
	Width(W) Min	Wall Thickness(T) (±0.3)	Width(W) Max	Wall Thickness(T) (±0.3)	
WRSXP-30/12	120	1.3	38	3.8	450-1200
WRSXP-40/12	130	1.2	38	3.8	450-1200
WRSXP-50/17	160	1.3	53	3.8	450-1200
WRSXP-65/24	205	1.2	75	3.8	450-1200
WRSXP-85/27	270	1.3	82	3.8	450-1200
WRSXP-100/27	320	1.4	82	3.8	450-1200
WRSXP-120/40	380	1.4	129	3.8	450-1000
WRSXP-150/50	475	1.4	157	3.8	450-1000
WRSXP-160/50	505	1.3	157	3.8	450-1000
WRSXP-170/51	535	1.2	160	3.8	450-1000
WRSXP-180/51	565	1.1	160	3.8	450-1000
WRSXP-195/52	590	1.0	163	3.8	450-1000

Technical Data

Property	Test Method	Standard Value
Tensile Strength	ASTM-D-638	⩾12MPa
Elongation at Break	ASTM-D-638	⩾300%
Tensile Strength Variation After Heat Aging (130°Cx168h)	ASTM-D-5510	⩽±20%
Elongatiion at Break Variation After Heat Aging (130°Cx168h)	ASTM-D-5510	⩽±20%
Dielectric Strength	IEC 60243	⩾15kV/mm
Volume Resistivity	IEC 60093	⩾$1x10^{13}$Ω.cm
Brittle Temperature	ISO 974	-40°C
Heat Shock	160°C，4h	No Crack
Water Absorption	ISO 62	⩽0.1%
Hardness（Shore A）	ISO 868	⩾80
Longitudinal Shrinkage	ASTM-D-2671	⩽10%
Eccentricity	ASTM-D-2671	⩽30%

WMPG
Heat Shrink Busbar Tube

- Manufactured from cross linked polyolefin.
- Used to offer insulation protection for busbar in switchgear and substation.
- Protects against short circuit and electrical leakage caused by small animals.
- Reduces busbar clearance requirements.
- RoHS compliant.
- Shrink temperature: start at 70℃, and fully recovered at 130℃.
- Color: yellow, red, green, blue, black .

Technical Data

Property	Test Method	Standard Value
Heat Shock	160°C，4h	No Crack
Tensile Strength	ASTM-D-638	⩾8MPa
Elongation at Break	ASTM-D-638	⩾300%
Tensile Strength Variation After Heat Aging (130°Cx168h)	ASTM-D-5510	⩽±20%
Elongatiion at Break Variation After Heat Aging (130°Cx168h)	ASTM-D-5510	⩽±20%
Flammability（Oxygen Index）	IEC 4589	⩾30%
Hardness（Shore A）	ISO 868	⩽90

Electrical Property of Heat Shrink Busbar Tube

Item	Test Method	Standard Value	
		10kV	35kV
Volume Resistivity	IEC 60093	⩾$1x10^{14}$Ω・cm	
Dielectric Strength	IEC 60243	⩾25kV/mm	
Power frequency voltage withstanding	DL/T 1059	42kV	95kV
Impulse voltage	DL/T 1059	75kV	185kV

10kV WMPG Series

Spec.	As Supplied/mm		After Recovered/mm		Standard Length /mm(±5)	Application /mm	
	ID (Min)	Wall Thickness (±20%)	ID (Max)	Wall Thickness (±10%)		Width of Rectangular Busbar	Diameter of Circular Busbar
WMPG-20	20	1.0	10	2.4	1000	20	15
WMPG-25	25	1.0	12	2.4	1000	25	15
WMPG-30	30	1.1	14	2.4	1000	30	20
WMPG-40	40	1.0	17	2.4	1000	40	30
WMPG-50	50	1.1	22	2.7	1000	50	35
WMPG-65	65	1.1	28	2.7	1000	65	45
WMPG-75	75	1.1	32	2.7	1000	75	50
WMPG-85	85	1.1	37	2.7	1000	85	65
WMPG-100	100	1.1	43	2.7	1000	100	75
WMPG-120	120	1.1	53	2.7	1000	120	85
WMPG-150	140	1.1	65	2.7	1000	150	100
WMPG-180	180	1.1	75	2.7	1000	180	125
WMPG-210	200	1.1	88	2.7	1000	200	150
WMPG-230	220	1.0	88	2.7	1000	/	/
WMPG-250	250	1.5	107	3.6	1000	/	/
WMPG-300	290	1.3	107	3.8	1000	/	/
WMPG-325	325	1.1	107	3.8	1000	/	/
WMPG-350	350	1.2	159	2.7	1000	/	/
WMPG-400	400	1.2	185	2.7	1000	/	/
WMPG-500	500	1.2	210	3.0	1000	/	/

35kV WMPG Series

Spec.	As Supplied/mm		After Recovered/mm		Standard Length /mm(±5)	Application /mm	
	ID (Min)	Wall Thickness (±20%)	ID (Max)	Wall Thickness (±10%)		Width of Rectangular Busbar	Diameter of Circular Busbar
WMPG-20	20	2.4	10	4.5	1000	20	15
WMPG-25	25	2.0	10	4.5	1000	20	15
WMPG-30	28	2.4	14	4.5	1000	30	20
WMPG-40	38	2.2	17	4.5	1000	40	30
WMPG-50	48	2.2	21	4.8	1000	50	35
WMPG-65	65	2.2	27	5.0	1000	65	45
WMPG-75	73	2.2	31	5.0	1000	75	50
WMPG-85	85	2.0	32	5.0	1000	85	55
WMPG-100	100	2.0	38	5.0	1000	100	75
WMPG-120	120	2.1	50	5.0	1000	120	85
WMPG-150	140	2.1	59	5.0	1000	150	105
WMPG-180	180	2.3	71	5.5	1000	180	125
WMPG-210	200	2.2	88	5.0	1000	200	140
WMPG-230	220	2.0	88	5.0	1000	/	/

Note: Size with * are not standard stock items.

Heat Shrink Moulded Shapes

WRSZT
Heat Shrink Breakout

- Manufactured from cross-linked polyolefin.
- Provide sealing protection and strain relief over multi-core cable crutch, including 2-, 3-, 4-, and 5-core breakout.
- Coated with adhesive on the body and the fingers to form a watertight seal.
- Flame-retardant breakouts are available upon customer request.
- Meeting with varieties of configuration requirements.
- Shrink temperature: start at 90°C, and fully recovered at 130°C.

Technical Data

Property	Test Method	Standard Value		
		Insulated Breakout	Oil Resistant Breakout	Semi-conductive Breakout
Tensile Strength	ASTM-D-638	⩾12MPa	⩾12MPa	⩾12MPa
Elongation at Break (120□ ,168 hrs)	ASTM-D-638	⩾300%	⩾300%	⩾300%
Tensile Strength after Aging (120□ ,168 hrs)	ASTM-D-638	⩾10MPa	⩾10MPa	⩾10MPa
Elongation at Break after Aging	ASTM-D-638	⩾230%	⩾230%	⩾230%
Tensile Strength Variation after Dipping	ASTM-D-638	-	⩽20%	-
Elongation at Break after Dipping	ASTM-D-638	-	⩾230%	-
Dielectric Strength	IEC 60243	⩾15kV/mm	⩾15kV/mm	-
Water Absorption	ISO 62	⩽0.1%	⩽0.1%	⩽0.1%
Volume Resistivity	IEC 60093	⩾$1\times10^{13}\Omega\cdot$cm	⩾$1\times10^{13}\Omega\cdot$cm	⩽$1\times10^{3}\Omega\cdot$cm
Brittle Temperature	ISO 974	-40°C	-40°C	-40°C
Heat Shock	160°C，4h	No Crack	No Crack	No Crack
Hardness(Shore A)	ISO 868	⩾80	⩾80	⩾80

Selection Table

Cores	Spec.	As Supplied（mm）			After Recovered	
		Body Diameter(D) Min	Finger Diameter(d) Min	Full Length (L)(±5)	Body Diameter(D) Max	Finger Diameter(d) Max
2-cores Breakout	WRSZT2-24/14(0#)	24	12	140	14	5
	WRSZT2-38/18(1#)	38	20	145	18	7
	WRSZT2-45/22(2#)	45	25	145	22	10
	WRSZT2-60/25(3#)	60	35	140	25	11
	WRSZT2-70/25(4#)	70	40	140	25	11
3-cores Breakout	WRSZT3-24/17(-2#)	24	11	140	17	5
	WRSZT3-48/22(-1#)	48	18	165	22	7
	WRSZT3-58/28(0#)	58	25	180	28	8
	WRSZT3-68/37(1#)*☆	68	30	210	37	13
	WRSZT3-87/43(2#)*☆	87	39	220	43	16
	WRSZT3-106/53(3#)*☆	106	42	235	53	19
	WRSZT3-125/65(4#)*☆	125	58	245	65	25
	WRSZT3-140/65(5#)*☆	140	65	245	65	25
4-cores Breakout	WRSZT4-38/19(0#)	38	10	125	19	5
	WRSZT4-50/25(1#)☆	50	16	135	25	7
	WRSZT4-70/32(2#)☆	70	23	185	32	10
	WRSZT4-82/46(3#)☆	82	60	210	46	13
	WRSZT4-90/46(4#)☆	90	35	210	46	13
	WRSZT4-109/54(5#)	109	42	240	54	18
5-cores Breakout	WRSZT5-42/21(0#)	42	11	130	21	5
	WRSZT5-57/30(1#)	57	15	170	30	7
	WRSZT5-70/38(2#)	70	23	170	38	9
	WRSZT5-90/53(3#)	90	30	180	53	13
	WRSZT5-120/48(4#)	120	39	205	48	14

Remark: 1. * means 3-core semi-conductive breakouts are available upon custom request.
2. ☆ means 3-core or 4-core oil resistant breakouts are available upon custom request.
3. The breakout coated with hot-melt adhesive comes in two forms: flat adhesive and spiral adhesive, which can meet different customer needs.

WRSZT6
Heat Shrink 6-Core Breakout

- Made of cross linked polyolefin to provide mechanical protection and strain relief.
- Inner coated with adhesive on the body and the fingers to form a durable watertight seal.
- To provide sealing protection over 6-core cable crutch, such as trailing cable, variable frequency drive cable, telecommunication cables, control cable, etc.
- Shrink temperature: start at 90°C,and fully recovered at 130°C.

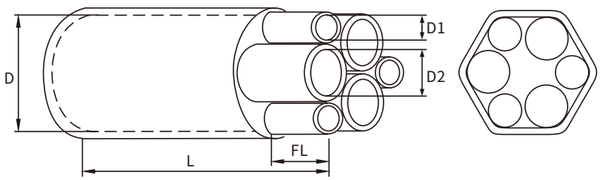

Selection Table

Cores	Spec.	As Supplied（mm）				After Recovered		
		Body Diameter(D) Min	Big Finger Diameter(d1) Min	Small Finger Diameter(d2) Min	Full Length (L)(±5)	Body Diameter(D) Max	Big Finger Diameter(d1) Max	Small Finger Diameter(d2) Max
6-cores Breakout	1#	84	30	20	215	41	11	8
	2#	132	55	31	225	53	16	11

Technical Data

Property	Test Method	Standard Value
Tensile Strength	ASTM-D-638	⩾12MPa
Elongation at Break	ASTM-D-638	⩾300%
Volume Resistivity	IEC 60093	⩾1x10^{13}Ω.cm
Dielectric Strength	IEC 60243	⩾15kV/mm
Brittle Temperature	ISO 974	-40°C
Heat Shock	160°C，4h	No Crack
Water Absorption(23±2)°C 24h	ISO 62	⩽0.1 %
Hardness（Shore A）	ISO 868	⩾80

WRSFM
Heat Shrink Cable End Cap

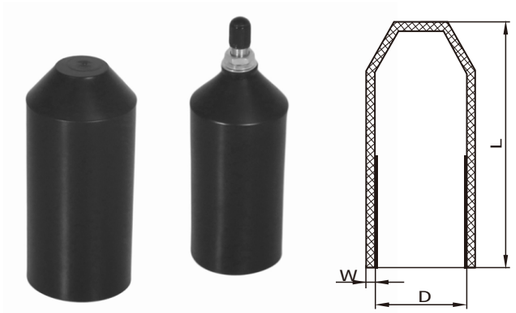

- Manufactured from polyolefin, applied as insulation of power and telecommunication cable ends.
- Used to seal cable ends during installation or storage, protecting cable ends against oxidation, ozone, UV, etc.
- Coated with hot-melt adhesive to ensure reliable seal of cable ends.
- Flame-retardant end caps are available upon customer request.
- Available with valve if required.
- Shrink temperature: start at 90°C, and fully recovered at 130°C.

Selection Table

Spec.	As Supplied（mm）			After Recovered	
	Inner Diameter (D) Min	Wall Thickness (T) (±20%)	Height (L)(±5)	Inner Diameter (D) Max	Wall Thickness (T) (±10%)
WRSFM-12	12	1.0	45	5	2.5
WRSFM-16	16	1.0	70	8.5	2.5
WRSFM-20	20	1.0	70	8.5	2.5
WRSFM-25	25	1.0	80	11	2.5
WRSFM-30	30	1.3	95	16	2.8
WRSFM-35	35	1.0	95	18	2.6
WRSFM-40	40	1.1	95	18	2.6
WRSFM-55	55	1.0	125	26	2.7
WRSFM-75	75	1.3	145	31	3.2
WRSFM-100	97	1.3	140	40	5.2
WRSFM-120	117	1.3	155	57	4.0
WRSFM-140	140	1.3	185	63	4.0
WRSFM-160	158	2.1	270	95	4.0
WRSFM-180	180	2.1	270	95	4.0
WRSFM-200	200	1.5	270	95	4.0
WRSFM-250	245	1.5	270	95	4.0

Remark: The hot-melt adhesive comes in two forms: flat adhesive and spiral adhesive, which can meet different customer needs.

Technical Data

Property	Test Method	Standard Value
Tensile Strength	ASTM-D-638	⩾12MPa
Elongation at Break	ASTM-D-638	⩾300%
Volume Resistivity	IEC 60093	⩾1x10^{13}Ω.cm
Dielectric Strength	IEC 60243	⩾15kV/mm
Brittle Temperature	ISO 974	-40°C
Heat Shock	160°C，4h	No Crack
Water Absorption(23±2)°C 24h	ISO 62	⩽0.1 %
Hardness（Shore A）	ISO 868	⩾80

AC
Heat Shrink Anode Cap

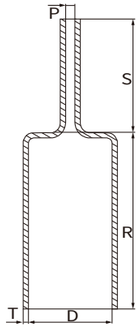

- Made of cross linked polyolefin, inner coated with adhesive.
- Sealing and protecting the critical connection between lead wire and anode.
- Ideal to avoid premature system failure due to loss of the wire to anode termination.
- Continuous operation temperature: -45°C to 105°C.

Selection Table

Spec.		As Supplied/mm					After Recovered/mm		
		D Min	d Min	T (±0.3)	R (±5)	S (±5)	D Max	d Max	T (±0.3)
AC-66/48	2#	66	12	1.6	80	78	48	7	2.5
AC-87/63	3#B	87	12	2.0	105	80	63	7	2.7
AC-120/86	4#	120	13	2.0	100	77	86	8	2.7
AC-114/86	4#B	114	12	1.8	100	77	86	8	2.7
AC-50/30	ϕ50	50	20	1.8	45	105	30	6.5	3.2
AC-86/42	ϕ86	86	16	1.2	155	80	42	6.5	3.2
AC-112/58	ϕ112	112	16	1.2	150	80	58	6.5	3.2

Remark: The anode cap coated with hot-melt adhesive comes in two forms: plane adhesive and spiral adhesive, which can meet different customer needs.

Technical Data

Property	Test Method	Standard Value
Tensile Strength	ASTM-D-638	⩾12MPa
Elongation at Break	ASTM-D-638	⩾300%
Volume Resistivity	IEC 60093	⩾$1x10^{13}$Ω.cm
Dielectric Strength	IEC 60243	⩾15kV/mm
Brittle Temperature	ISO 974	-40°C
Hardness（Shore A）	ISO 868	⩾80
Water Absorption(23±2)°C 24h	ISO 62	⩽0.1%
Heat Shock	160°C，4h	No Crack

WRSSQ
Heat Shrink Anti-tracking Rain Shed

- Manufactured from polyolefin, coated with anti-tracking adhesive.
- High creep resistance and anti-tracking property.
- Shaped components to meet a range of requirement.

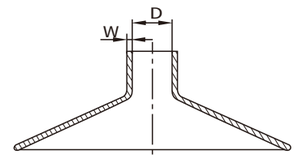

Selection Table

(1-core Rain Shed)

Spec.	As Supplied/mm		After Recovered/mm	
	Inner Diameter (D) (±5)	Wall Thickness (T) (±20%)	Inner Diameter (D)Max	Wall Thickness (T)(±10%)
WRSSQ-35/17	35	1.9	17	2.7
WRSSQ-40/24	40	1.9	24	2.7
WRSSQ-50/24	50	1.9	24	2.7
WRSSQ-60/32	60	2.4	32	4.0
WRSSQ-70/32	70	2.4	32	4.0

(3-core Rain Shed)

Spec.	As Supplied/mm		After Recovered/mm	
	Inner Diameter (D) (±5)	Wall Thickness (T) (±20%)	Inner Diameter (D)Max	Wall Thickness (T)(±10%)
WRSSQ-35/16	35	1.1	16	2.7
WRSSQ-45/22	45	1.1	22	3.0
WRSSQ-50/22	50	1.1	22	3.0

Technical Data

Property	Test Method	Standard Value
Tensile Strength	ASTM-D-638	⩾8MPa
Elongation at Break	ASTM-D-638	⩾300%
Tensile Strength Variation After Heat Aging（130°Cx168h）	ASTM-D-5510	⩽±30%
Elongatiion at Break Variation After Heat Aging（130°Cx168h）	ASTM-D-5510	⩽±30%
Volume Resistivity	IEC 60093	⩾$1x10^{14}$Ω.cm
Dielectric Strength	IEC 60243	⩾20kV/mm
Tracking Strength	IEC 60587	1A3.5
Dielectric Constant	IEC 60250	⩽5
Heat Shock	160°C，4h	No Crack
Water Absorption(23±2)°C 24h	ISO 62	⩽0.1%
Hardness（Shore A）	ISO 868	⩾80
Brittle Temperature	ISO 974	-40°C

WRSRS
Heat Shrink Anti-tracking Rain Shed

- Manufactured from polyolefin, coated with anti-tracking adhesive.
- High creep resistance and anti-tracking property.
- Shaped components to meet a range of requirements.

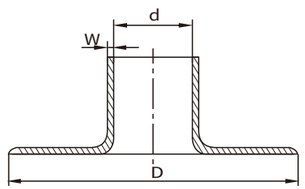

Selection Table

Spec.	D/mm(±5)	As Supplied/mm	After Recovered/mm	
		Inner Diameter (d) (±5)	Inner Diameter (d) Max	Wall Thickness (W) (±0.4)
WRSRS-30/12	90	30	12	2.8
WRSRS-35/12	90	35	12	2.8
WRSRS-40/20	120	40	20	2.8
WRSRS-45/20	120	45	20	2.8
WRSRS-50/20	120	50	20	2.8
WRSRS-55/20	120	55	20	2.8
WRSRS-60/20	120	60	20	2.8
WRSRS-75/30	140	75	30	2.6
WRSRS-80/30	140	80	30	2.6

Technical Data

Property	Test Method	Standard Value
Tensile Strength	ASTM-D-638	⩾8MPa
Elongation at Break	ASTM-D-638	⩾300%
Tensile Strength Variation After Heat Aging（130°Cx168h）	ASTM-D-5510	⩽±30%
Elongatiion at Break Variation After Heat Aging（130°Cx168h）	ASTM-D-5510	⩽±30%
Volume Resistivity	IEC 60093	⩾1x10^{14}Ω.cm
Dielectric Strength	IEC 60243	⩾20kV/mm
Brittle Temperature	ISO 974	-40°C
Tracking Strength	IEC 60587	1A3.5
Dielectric Constant	IEC 60250	⩽5
Heat Shock	160°C，4h	No Crack
Water Absorption(23±2)°C 24h	ISO 62	⩽0.1 %
Hardness（Shore A）	ISO 868	⩾80

WRSJX
Heat Shrink Right Angle/In-line Bushing Boot

- Manufactured from polyolefin, inner coated with hot-melt adhesive at the ends.
- Excellent insulation, flame retardant, thermal stability, etc.
- Used to protect cable against flashover or surges induced in switchgear and transformer.
- Shaped components to meet a range of requirements.

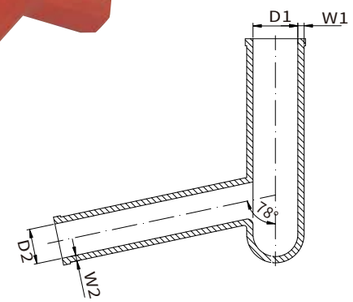

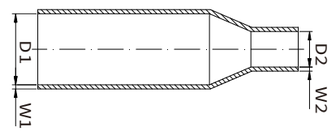

Selection Table

Spec.	As Supplied/mm		After Recovered/mm			
	D1 Min	D2 Min	D1 Max	D2 Max	W1 (±10%)	W2 (±10%)
Right Angle Boot						
WRSJX-R1	80	35	36	19	5.6	5.0
WRSJX-R2	80	50	36	19	5.6	5.0
WRSJX-R3	80	50	36	28	5.6	5.0
WRSJX-R4	95	70	36	28	5.6	5.0
WRSJX-R5	145	70	72	34	5.6	5.0
In-line Bushing Boot						
WRSJX-S1	80	34	32	19	3.6	3.6
WRSJX-S2	80	58	32	19	3.6	3.6
WRSJX-S3	140	90	68	34	3.6	3.6

Technical Data

Property	Test Method	Standard Value
Tensile Strength	ASTM-D-638	⩾10MPa
Elongation at Break	ASTM-D-638	⩾300%
Tensile Strength Variation After Heat Aging（130°Cx168h）	ASTM-D-5510	⩽±20%
Elongatiion at Break Variation After Heat Aging（130°Cx168h）	ASTM-D-5510	⩽±20%
Volume Resistivity	IEC 60093	⩾1x10^{14}Ω.cm
Dielectric Strength	IEC 60243	⩾25kV/mm

WRSFT
Cable End Enclosure

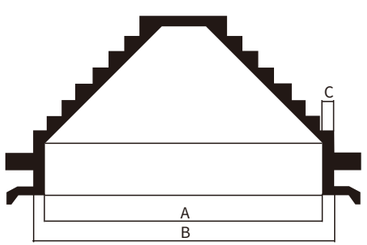

- Applicable to cable inlet and outlet sealing inside switchgear.
- Prevent small insects from entering live equipment and abrasion between cables and metal switchgear.

Selection Table

Spec.	A (mm) (±5)	B (mm) (±5)	C (mm) (±0.5)
WRSFT-70	60	70	4.0
WRSFT-110	97	110	6.0

WRSLT
Heat Shrink Cable Entry Seal

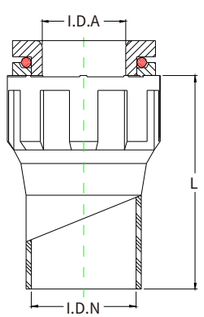

- Made of flame-retardant polyolefin, inner coated with adhesive to provide sealing protection.
- Provides a watertight and fume-tight seal where cables enter connection boxes, bulkheads, or other enclosures.
- Consists of a three-part assembly- a rigid plastic nut, O-ring, and a heat shrink moulded body.
- Continuous operation temperature: -55□ to 90□ .

Selection Table

Part Number	As Supplied Length (L)(±5mm)	As Supplied Nose I.D. ((I.D.N,Min)/mm	After Recovered Nose I.D. (I.D.N,Max)/mm	Body I.D(I.D.A,±5mm)
WRSLT-4	95	45	19	41
WRSLT-5	162	70	36	74

Technical Data

Property	Test Method	Standard Value
Tensile Strength	ASTM-D-2671	⩾10MPa
Elongation at Break	ASTM-D-2671	⩾300%
Tensile Strength Variation After Heat Aging（130°Cx168h）	ASTM-D-5510	⩽±20%
Elongatiion at Break Variation After Heat Aging（130°Cx168h）	ASTM-D-5510	⩽±20%
Water Absorption	ISO 62	⩽0.1%
Dielectric Strength	IEC 60243	⩾20kV/mm
Volume Resistivity	IEC 60093	⩾$1x10^{14}$Ω.cm

WRSY
Heat Shrink Y-type Tube

- Made of cross-linked polyolefin.
- Mostly used to provide sealing and protection for bifurcated cable, especially for the branch cable lapping on the main cable.
- Shrink temperature: start at 90℃ , and fully recovered at 130℃.

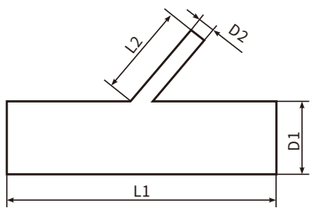

Selection Table

Product No.	L1/±5mm	L2/±3mm	D1/mm		D2/mm	
			As Supplied	After Recovered	As Supplied	After Recovered
WRSY-28/13	120	38	⩾28	⩽13	⩾9	⩽4

Technical Data

Property	Test Method	Standard Value
Tensile Strength	ASTM-D-638	⩾10MPa
Elongation at Break	ASTM-D-638	⩾300%
Dielectric Strength	IEC 60243	⩾20kV/mm
Volume Resistivity	IEC 60093	⩾$1\times10^{13}\Omega\cdot$cm

Technical Data

Property			Test Method	Standard Value
Physical properties		Tensile Strength	ASTM-D-2671	⩾12MPa
		Elongation at Break	ASTM-D-2671	⩾350%
		Tensile Strength after Aging	ISO 868	⩾10MPa
		Elongation at Break after Aging (130□ , 168h)	ASTM-D-2671	⩾280%
		Heat shock(200□ , 4h)	UL 224	No dripping, flowing or cracking
		Low temperature flexibility	ISO 974	-40□
Oxygen index			ISO 4589	⩾28
Dielectric strength			IEC 60243	⩾20kV/mm
Solvent resistance (23□ □ 24h)	Gasoline	Tensile strength	ASTM-D-2671	⩾10MPa
		Elongation at break	ASTM-D-2671	⩾280%
	Diesel oil	Tensile strength	ASTM-D-2671	⩾10MPa
		Elongation at break	ASTM-D-2671	⩾280%
	Acid & alkali	Tensile strength	ASTM-D-2671	⩾10MPa
		Elongation at break	ASTM-D-2671	⩾280%

Z11
Heat Shrink Cable Straight Boot

Features

- Made of semi-rigid flame-retarded polyolefin.
- Used for strong mechanical protection, connector/cable strain relief, and complete environmental sealing.
- This family of boots has no lip.
- Provided with or without adhesive lining.
- Standard colour: Black.

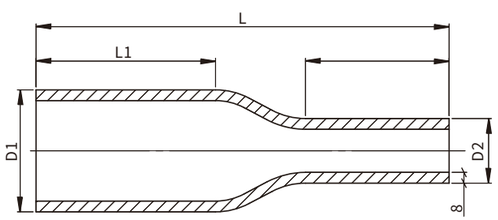

After unrestricted recovery（b）

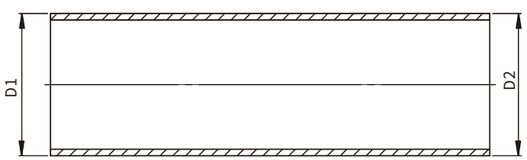

As supplied（a）

Selection Table

Product No.	Specifcation	D_1			D_2			L ±10%	L_1 ±10%	L_2 ±10%	δ ±20%
		As Supplied	After Recovered	Range Of Application	As Supplied	After Recovered	Range Of Application				
Z1131	24/11-5.6	24	11.0	14.0-20.0	24	5.6	7.0-14.0	50	27	16	2.0

unit mm

W11
Heat Shrink Right Angled Boot

Features

- Made of semi-rigid flame-retarded polyolefin.
- Provide strong mechanical protection, connector/cable strain relief, and complete environmental sealing.
- This family of boots has no lip.
- Provided with or without adhesive lining.
- Standard colour: Black.

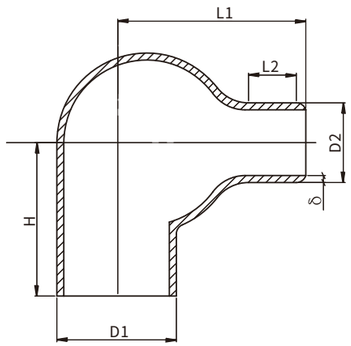

After unrestricted recovery（b）

As supplied（a）

Selection Table

Product No.	Specifcation	D_1			D_2			H	L_1 ±10%	L_2 ±10%	δ ±20%
		As Supplied	After Recovered	Range Of Application	As Supplied	After Recovered	Range Of Application				
W1121	22/11-5	22	11	13.0-18.5	22	5.0	6.2-12.0	27	36	18	2.0

unit mm

C21
Heat Shrink 2-Way Outlet Shapes

Features

- Made of semi-rigid flame-retarded polyolefin.
- Provide strong mechanical protection, strain relief, and complete environmental sealing on cable harness assemblies.
- Provided with or without adhesive lining.
- Standard colour: Black.

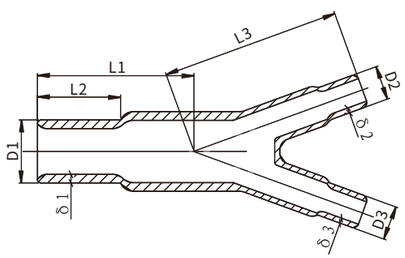

After unrestricted recovery（b）

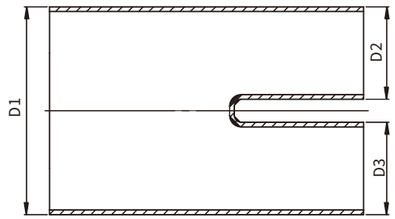

As supplied（a）

Selection Table

Product No.	D_1		$D_{2,3}$		L_1 ±10%	L2 ±10%	L3 ±10%	δ_1 ±20%	$\delta_2\delta_3$ ±20%
	As Supplied	After Recovery	As Supplied	After Recovery					
C2111	13.5	6.0	6.6	3.3	24.0	15.5	25	2.0	1.5
C2121	27.0	12.4	13.2	6.1	53.3	33.0	55	2.5	2.0

unit mm

C31
Heat Shrink 3-Way Outlet Shapes

Features

- Made of semi-rigid flame-retarded polyolefin.
- Provide strong mechanical protection, strain relief, and complete environmental sealing on cable harness assemblies.
- Provided with or without adhesive lining.
- Standard colour: Black.

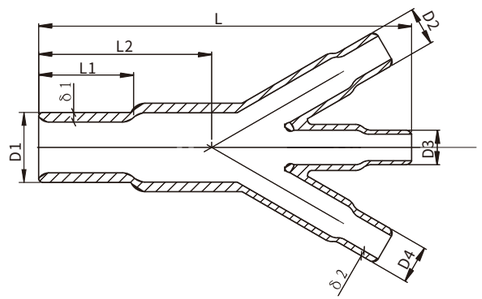

After unrestricted recovery（b）

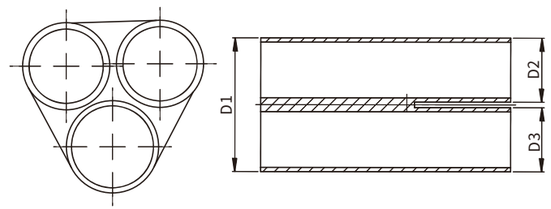

As supplied（a）

Selection Table

Product No.	D_1		$D_{2,3,4}$		L ±10%	L1 ±10%	L2 ±10%	δ_1 ±20%	δ_2 ±20%
	As Supplied	After Recovery	As Supplied	After Recovery					
C3111	14	6.6	6.6	3.6	46	15.7	31	2.0	1.5
C3121	27	13.2	13.2	6.9	94	33.0	57	2.5	2.0

unit mm

C41
Heat Shrink 4-Way Outlet Shapes

Features

- Made of semi-rigid flame-retarded polyolefin.
- Provide strong mechanical protection, strain relief, and complete environmental sealing on cable harness assemblies.
- Provided with or without adhesive lining.
- Standard colour: Black.

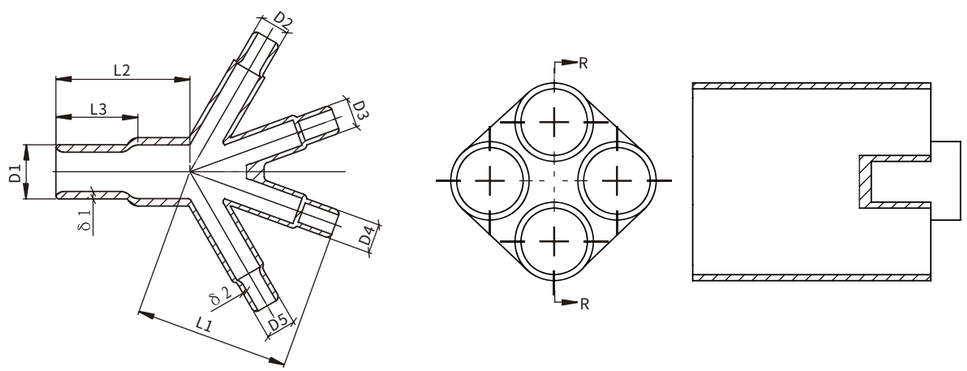

After unrestricted recovery（b）　　As supplied（a）

Selection Table

Product No.	D_1		$D_{2,3,4,5}$		L_1 ±10%	L2 ±10%	L3 ±10%	δ_1 ±20%	δ_2 ±20%
	As Supplied	After Recovery	As Supplied	After Recovery					
C4121	19.3	9.7	9.4	5.3	35.6	43.2	23.1	2.0	1.5

unit mm

Cold Shrink Cable Accessories

Cold shrink cable accessories are capable of shrinking without application of heat. They are manufactured in a pre-expanded condition and assembled onto a removable core. The core is removed after the tube is positioned over the cable for installation, allowing the tube to shrink and providing a moisture-tight seal.

Woer cold shrink cable accessories are characterized by simple solutions with safe connection. They are manufactured with liquid silicone rubber, which has high-quality electrical insulation, excellent tracking resistance as well as high elasticity.

WLN, WLW
Cold shrink termination up to 42 kV

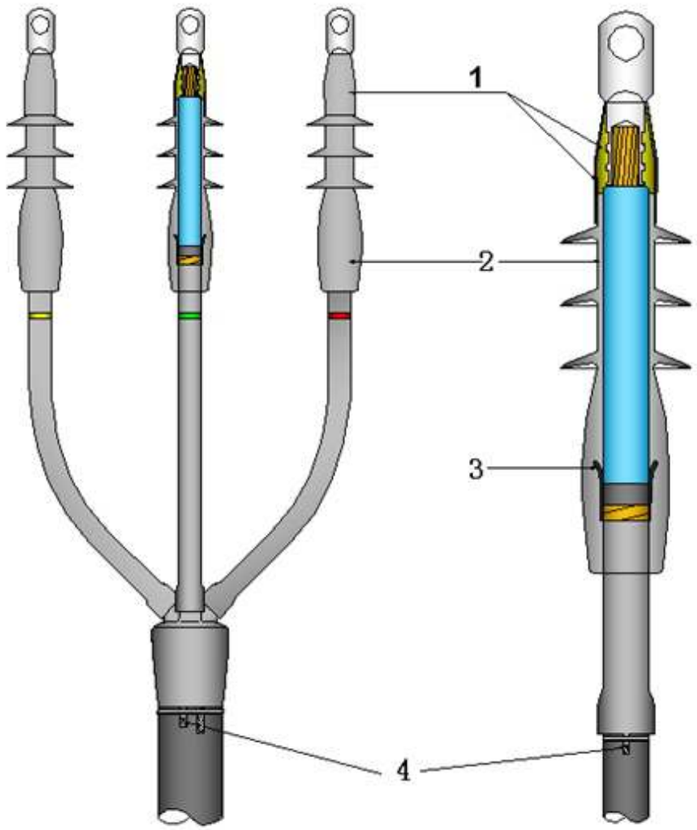

Features:

1. Environmental top sealing treatment
   Three steps to provide a seal against the entrance of the external environment.
2. Excellent external housing
   Imported LSR offers excellent hydrophobicity and great anti-tracking property to ensure the power safety.
3. Stress control
   Stress cone adopts well designed geometric analysis to smooth out the high stress-intense area.
4. Earth connection
   Adopt Solderless earth connection to connect metal screen or armour to ground. For cables with wire screen, copper wires are imbedded in the sealing mastic to prevent any corrosion by moisture ingression.

Note:

Terminations can be ordered as standard kits (without lugs) or complete kits.
Terminations and components for other cable types are available on request.

Selection Table

Voltage U_0 /U (U_m)	Cores	Cable Cross Section /mm²	Nominal insulation thickness /mm	Diameter over Insulation /mm	Kit No.
0.6/1(1.2)kV	1,2,3, 4, 5 Indoor or Outdoor	10-25 35-50 70-95 120-150 185-240 300-400	—	—	1.2kVWLT-1(2,3,4,5)/0 1.2kVWLT-1(2,3,4,5)/1 1.2kVWLT-1(2,3,4,5)/2 1.2kVWLT-1(2,3,4,5)/3 1.2kVWLT-1(2,3,4,5)/4 1.2kVWLT-1(2,3,4,5)/5
6/10(12)kV 6.35/11(12)kV	1, 3 Indoor	25-35 50-70 95-150 185-300 400-500 630	3.4	13.5-16 16-19.5 19-24.5 23.5-30 30.5-35 37-42.3	12kVWLN- 1/0(3/0) 12kVWLN- 1/1(3/1) 12kVWLN- 1/2(3/2) 12kVWLN-1/3(3/3) 12kVWLN-1/4(3/4) 12kVWLN-1/5(3/5)
	1, 3 Outdoor	25-35 50-70 95-150 185-300 400-500 630	3.4	13.5-16 16-19.5 19-24.5 23.5-30 30.5-35 37-42.3	12kVWLW- 1/0(3/0) 12kVWLW- 1/1(3/1) 12kVWLW- 1/2(3/2) 12kVWLW- 1/3(3/3) 12kVWLW- 1/4(3/4) 12kVWLW- 1/5(3/5)
8.7/15(17.5)kV	1, 3 Indoor	16 25-50 70-120 150-240 300-400 500-630	4.5	13.5-16 16-19.5 19-24.5 23.5-30 30.5-35 37-42.3	17.5kVWLN- 1/0(3/0) 17.5kVWLN- 1/1(3/1) 17.5kVWLN- 1/2(3/2) 17.5kVWLN- 1/3(3/3) 17.5kVWLN-1/4(3/4) 17.5kVWLN-1/5(3/5)
	1, 3 Outdoor	16 25-50 70-120 150-240 300-400 500-630	4.5	13.5-16 16-19.5 19-24.5 23.5-30 30.5-35 37-42.3	17.5kVWLW- 1/0(3/0) 17.5kVWLW- 1/1(3/1) 17.5kVWLW- 1/2(3/2) 17.5kVWLW- 1/3(3/3) 17.5kVWLW-1/4(3/4) 17.5kVWLW-1/5(3/5)
12/20(24)kV 12.7/22(24)kV	1, 3 Indoor	25-50 70-120 150-240 300-400 500-630	5.5	18-21.5 21-26.5 25.5-32 32.5-37 39-44.3	24kVWLN-1/1(3/1) 24kVWLN-1/2(3/2) 24kVWLN-1/3(3/3) 24kVWLN-1/4(3/4) 24kVWLN-1/5(3/5)
	1, 3 Outdoor	25-50 70-120 150-240 300-400 500-630	5.5	18-21.5 21-26.5 25.5-32 32.5-37 39-44.3	24kVWLW-1/1(3/1) 24kVWLW-1/2(3/2) 24kVWLW-1/3(3/3) 24kVWLW-1/4(3/4) 24kVWLW-1/5(3/5)
18/30(36)kV 19/33(36)kV	1, 3 Indoor	35-50 70-95 120-185 240-500 630	8.0	22-27 27-30 30-35 35.5-46 46.5-55	36kVWLN-1/1(3/1) 36kVWLN-1/2(3/2) 36kVWLN-1/3(3/2) 36kVWLN-1/4(3/3) 36kVWLN-1/5(3/4)
	1, 3 Outdoor	35-50 70-95 120-185 240-500 630	8.0	22-27 27-30 30-35 35.5-46 46.5-55	36kVWLW-1/1(3/1) 36kVWLW-1/2(3/2) 36kVWLW-1/3(3/2) 36kVWLW-1/4(3/3) 36kVWLN-1/5(3/4)
20.8/36(42)kV	1, 3 Indoor	50-95 120-240 300-400 500-630	9.3	28.5-35 35.5-42 42.5-48 48.5-56	42kVWLN-1/1(3/1) 42kVWLN-1/2(3/2) 42kVWLN-1/3(3/3) 42kVWLN-1/4(3/4)
	1, 3 Outdoor	50-95 120-240 300-400 500-630	9.3	28.5-35 35.5-42 42.5-48 48.5-56	42kVWLW-1/1(3/1) 42kVWLW-1/2(3/2) 42kVWLW-1/3(3/3) 42kVWLW-1/4(3/4)
26/35(42)kV	1, 3 Indoor	50-95 120-240 300-400 500-630	10.5	28.5-35 35.5-42 42.5-48 48.5-56	42kVWLN-1/1(3/1) 42kVWLN-1/2(3/2) 42kVWLN-1/3(3/3) 42kVWLN-1/4(3/4)
	1, 3 Outdoor	50-95 120-240 300-400 500-630	10.5	28.5-35 35.5-42 42.5-48 48.5-56	42kVWLW-1/1(3/1) 42kVWLW-1/2(3/2) 42kVWLW-1/3(3/3) 42kVWLW-1/4(3/4)

WLJ
Cold Shrink Joint up to 42 kV

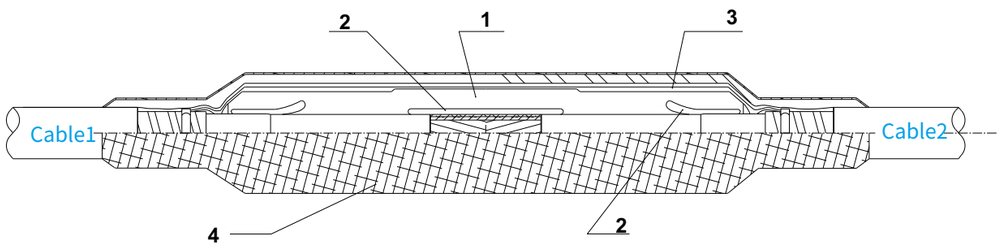

1. Joint Body
   One-piece design to provide the stress control,insulation and insulation screen to rebuild the cable structure.
2. Electrical stress control
   Stress control tube, together with stress cone are used to smooth out the electrical field at the screen cuts.
3. Metallic shielding
   Copper mesh which has been secured with solderless earth connection is wrapped around the joint area to rebuild the metallic screen and provide screen continuity across the joint.
4. Outer sealing and protection
   The outer sealing and protection is performed by both the waterproof tape and armour tape. So they provide mechanical protection and chemical resistance as expected from cable oversheath.

Note:

Joints can be ordered as standard kits (without connectors) or complete kits.
Joints and components for other cable types are available on request.
Connectors shall be ordered separately.

Selection Table

Voltage U_0/U (U_m)	Cores	Cable Cross Section/mm²	Nominal insulation thickness /mm	Diameter over Insulation/mm	Kit No.
0.6/1(1.2)kV	1, 2,3, 4, 5	10-25 35-50 70-95 120-150 185-240 300-400	—	—	1.2kVWLJ-1(2,3,4,5)/0 1.2kVWLJ-1(2,3,4,5)/1 1.2kVWLJ-1(2,3,4,5)/2 1.2kVWLJ-1(2,3,4,5)/3 1.2kVWLJ-1(2,3,4,5)/4 1.2kVWLJ-1(2,3,4,5)/5
6/10(12)kV 6.35/11(12)kV	1, 3	50-70 95-150 185-300 400-500 630	3.4	16-19.5 19-24.5 23.5-30 30.5-35 37-42.3	12kVWLJ-1/1(3/1) 12kVWLJ-1/2(3/2) 12kVWLJ-1/3(3/3) 12kVWLJ-1/4(3/4) 12kVWLJ-1/5(3/5)
8.7/15(17.5)kV	1, 3	25-50 70-120 150-240 300-400 500-630	4.5	16-19.5 19-24.5 23.5-30 30.5-35 37-42.3	17.5kVWLJ-1/1(3/1) 17.5kVWLJ-1/2(3/2) 17.5kVWLJ-1/3(3/3) 17.5kVWLJ-1/4(3/4) 17.5kVWLJ-1/5(3/5)
12/20(24)kV 12.7/22(24)kV	1, 3	25-50 70-120 150-240 300-400 500-630	5.5	18-21.5 21-26.5 25.5-32 32.5-37 39-44.3	24kVWLJ-1/1(3/1) 24kVWLJ-1/2(3/2) 24kVWLJ-1/3(3/3) 24kVWLJ-1/4(3/4) 24kVWLJ-1/5(3/5)
18/30(36)kV 19/33(36)kV	1, 3	35-50 70-120 150-240 300-400 500-630	8.0	22-28 26.5-33 31.5-39 35.5-43 40.5-49	36kVWLJ-1/1(3/1) 36kVWLJ-1/2(3/2) 36kVWLJ-1/3(3/3) 36kVWLJ-1/4(3/4) 36kVWLJ-1/5(3/5)
20.8/36(42)kV	1, 3	50-95 120-240 300-400 500-630	9.3	28.5-35 35.5-42 42.5-48 48.5-56	42kVWLJ-1/1(3/1) 42kVWLJ-1/2(3/2) 42kVWLJ-1/3(3/3) 42kVWLJ-1/4(3/4)
26/35(42)kV	1, 3	50-95 120-240 300-400 500-630	10.5	28.5-35 35.5-42 42.5-48 48.5-56	42kVWLJ-1/1(3/1) 42kVWLJ-1/2(3/2) 42kVWLJ-1/3(3/3) 42kVWLJ-1/4(3/4)

WCST
Cold Shrink Silicone Rubber Tube

- Manufactured from silicone rubber.
- Offering good mechanical, insulation and sealing protection.
- Accommodating a wide range of cable sizes.
- For indoor or outdoor applications.
- Simple and fast installation.
- Color: grey, black.

Selection Table

Spec.	ID before shrunk ΦD/mm	After full shrunk		Range/mm
		Length/mm	Thickness/mm	
WCST15	15±2	80~450	2.0±0.2	Φ6~Φ8
WCST20	20±2	80~450	2.0±0.2	Φ10~Φ14
WCST25	25±2	80~500	2.5±0.2	Φ12~Φ17
WCST32	32±2	80~490	2.5±0.2	Φ14~Φ21
WCST35	35±2	80~1000	2.0±0.2	Φ19~Φ28
WCST40	40±2	80~1000	2.0±0.2	Φ21~Φ31
WCST47	47±2	80~1000	2.0±0.2	Φ25~Φ37
WCST53	53±2	80~1000	2.0±0.2	Φ31~Φ45
WCST65	65±2	80~1000	3.0±0.2	Φ31~Φ50
WCST70	70±3	80~500	3.0±0.2	Φ37~Φ55
WCST80	80±3	80~500	3.0±0.2	Φ44~Φ65
WCST104	104±3	80~500	3.0±0.2	Φ51~Φ84
WCST120	120±3	80~420	3.0±0.2	Φ55~Φ100

Remark: ID* means inner diameter.

WEPDMC
Cold Shrink EPDM Tube

- Manufactured from EPDM rubber.
- Offering good mechanical, insulation and sealing protection.
- Accommodating a wide range of cable sizes.
- For indoor or outdoor applications.
- Simple and fast installation.

Selection Table

Cold Shrink Tube of General EPDM					
Product No.	Size	Application Range (mm/inch)	Length after Relaxed(mm/inch)	Material	Color
8320-L	Φ20	8~15/0.30~0.59	50~550/2~22	EPDM Rubber	Black
8325-L	Φ25	10~20/0.39~0.79	50~550/2~22	EPDM Rubber	Black
8335-L	Φ35	14~30/0.55~1.18	50~550/2~22	EPDM Rubber	Black
8340-L	Φ40	17.5~33/0.69~1.30	50~550/2~22	EPDM Rubber	Black
8353-L	Φ53	25~46/0.98~1.81	50~550/2~22	EPDM Rubber	Black
8370-L	Φ70	32~63/1.26~2.48	50-470/2~18	EPDM Rubber	Black
8104-L	Φ104	43~94/1.69~3.70	50-470/2~18	EPDM Rubber	Black
8125-L	Φ125	46~114/1.81~4.49	50-470/2~18	EPDM Rubber	Black
8150-L	Φ150	55-135/2.17~5.31	50-470/2~18	EPDM Rubber	Black

Cold Shrink Tube of High Shrinkage Ratio EPDM					
Product No.	Size	Application Range (mm/inch)	Length after Relaxed(mm/inch)	Material	Color
8435-L	Φ35	12.5~30/0.49~1.18	50~550/2~22	EPDM Rubber	Black
8440-L	Φ40	14~33/0.55~1.30	50~550/2~22	EPDM Rubber	Black
8453-L	Φ53	19~46/0.75~1.81	50~550/2~22	EPDM Rubber	Black
8470-L	Φ70	25~63/0.98~2.48	50-470/2~18	EPDM Rubber	Black
8480-L	Φ80	27.4~70/1.08~2.75	50-470/2~18	EPDM Rubber	Black

Remark: L indicates the required length after relaxed with the unit of mm or inch.

WCSF
Cold Shrink Silicone Rubber Breakout

- Manufactured from silicone rubber.
- Simple and fast installation meeting a variety of configuration requirements.
- Providing sealing protection over multi-core cable crutch, including 3-, 4-, 5-, 6-core breakouts.

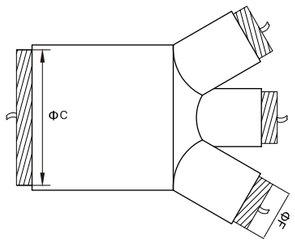

Specification

Spec.		ID before shrunk/mm		ID after shrunk/mm	
		Finger ϕF	Body ϕC	Finger ϕF	Body ϕF
2-core breakout	WCSF 2-1(1#)	Φ20±2	Φ47±2	Φ7$^{+3}_{0}$ mm	Φ14$^{+3}_{0}$ mm
	WCSF 2-2(2#)	Φ25±2	Φ65±2	Φ9$^{+3}_{0}$ mm	Φ19$^{+3}_{0}$ mm
	WCSF 2-3(3#)	Φ32±2	Φ80±2	Φ12$^{+3}_{0}$ mm	Φ25$^{+3}_{0}$ mm
	WCSF 2-4(4#)	Φ47±2	Φ110±3	Φ17$^{+3}_{0}$ mm	Φ35$^{+3}_{0}$ mm
3-core breakout	WCSF 3-(-1)(-1#)	Φ20±2	Φ56±2	Φ9$^{+3}_{0}$ mm	Φ19$^{+3}_{0}$ mm
	WCSF 3-(-2)-(2#)	Φ25±2	Φ65±2	Φ10$^{+3}_{0}$ mm	Φ23$^{+3}_{0}$ mm
	WCSF 3-1(1#)	Φ32±2	Φ80±2	Φ15$^{+3}_{0}$ mm	Φ37$^{+3}_{0}$ mm
	WCSF 3-2(2#)	Φ35±2	Φ88±2	Φ17$^{+3}_{0}$ 0mm	Φ44$^{+3}_{0}$ 0mm
	WCSF 3-3(3#)	Φ40±2	Φ104±2	Φ20$^{+3}_{0}$ mm	Φ51$^{+3}_{0}$ mm
	WCSF 3-4(4#)	Φ47±2	Φ120±2	Φ24$^{+3}_{0}$ mm	Φ60$^{+3}_{0}$ mm
	WCSF 3-5(5#)	Φ60±2	Φ140±2	Φ28$^{+3}_{0}$ mm	Φ73$^{+3}_{0}$ mm
	WCSF 3-6(6#)	Φ65±2	Φ150±2	Φ30$^{+3}_{0}$ mm	Φ75$^{+3}_{0}$ mm
	WCSF 3-7(7#)	Φ70±2	Φ165±2	Φ30$^{+3}_{0}$ mm	Φ75$^{+3}_{0}$ mm
4-core breakout	WCSF 4-1(1#)	Φ20±2	Φ60±2	Φ7$^{+3}_{0}$ mm	Φ21$^{+3}_{0}$ mm
	WCSF 4-2(2#)	Φ25±2	Φ70±2	Φ9$^{+3}_{0}$ mm	Φ29$^{+3}_{0}$ mm
	WCSF 4-3(3#)	Φ32±2	Φ88±2	Φ11$^{+3}_{0}$ 0mm	Φ41$^{+3}_{0}$ mm
	WCSF 4-4(4#)	Φ47±2	Φ120±2	Φ16$^{+3}_{0}$ 0mm	Φ46$^{+3}_{0}$ mm
5-core breakout	WCSF 5-1(1#)	Φ20±2	Φ70±2	Φ7$^{+3}_{0}$ mm	Φ27$^{+3}_{0}$ mm
	WCSF 5-2(2#)	Φ25±2	Φ88±2	Φ9$^{+3}_{0}$ mm	Φ37$^{+3}_{0}$ mm
	WCSF 5-3(3#)	Φ35±2	Φ110±3	Φ12$^{+3}_{0}$ mm	Φ48$^{+3}_{0}$ mm
	WCSF 5-4(4#)	Φ40±2	Φ120±3	Φ13$^{+3}_{0}$ mm	Φ49$^{+3}_{0}$ mm
6-core breakout	WCSF 6-1(1#)	Φ32±2	Φ104±3	Φ10$^{+3}_{0}$ mm	Φ39$^{+3}_{0}$ mm
	WCSF 6S-0(1#)	Finger 1 Φ28±2 Finger 2 Φ35±2	Φ104±3	Φ10$^{+3}_{0}$ mm	Φ39$^{+3}_{0}$ mm
6-core breakout	WCSF 6S-1(1#)	Finger 1 Φ14±2	Φ80±2	Φ5$^{+3}_{0}$ mm	Φ27$^{+3}_{0}$ mm
		Finger 2 Φ25±2		Φ9$^{+3}_{0}$ mm	
	WCSF 6S-2(2#)	Finger 1 Φ18±2	Φ104±3	Φ7$^{+3}_{0}$ mm	Φ37$^{+3}_{0}$ mm
		Finger 2 Φ32±2		Φ12$^{+3}_{0}$ mm	
	WCSF 6S-3(3#)	Finger 1 Φ25±2	Φ120±3	Φ9$^{+3}_{0}$ mm	Φ49$^{+3}_{0}$ mm
		Finger 2 Φ40±2		Φ17$^{+3}_{0}$ mm	
	WCSF 6S-4(4#)	Finger 1 Φ28±2	Φ140±2	Φ12$^{+3}_{0}$ mm	Φ61$^{+3}_{0}$ mm
		Finger 2 Φ47±2		Φ21$^{+3}_{0}$ mm	

Remark: 1. 6-core breakouts (with 3 big fingers and 3 small fingers) are used on trailing cable, variable frequency cables, telecommunication cables, control cables, etc.
2. Special specification is available per different requirements.

WCSEC
Cold Shrink End Cap

- Manufactured from EPDM rubber .
- Meeting a variety of configuration requirements.
- Providing sealing protection over multi-core cable ends.
- Simple and fast installation, no tools required.
- Sealing tight, high rebound even after prolonged years of aging and exposure.
- No mastic or tape required.
- High resistance to fungus, acid, alkalis and ozone.
- No training required for installation.

Selection Table

Product No.	ID as Supplied(±2) /mm	ID after Fully Recovered (Max)/mm	Application Range/mm	Length after Fully Recovered(±5)/mm
WCSEC-1	Φ20	Φ12	Φ13- Φ15	100
WCSEC-2	Φ28	Φ16	Φ18- Φ23	100
WCSEC-3	Φ47/Φ56	Φ23	Φ25- Φ38/Φ25- Φ48	100
WCSEC-4	Φ80	Φ46	Φ48- Φ70	100

COLD APPLIED CABLE ACCESSORIES

WSKG
Silicone Rubber Overhead Line Cover

The silicone rubber overhead line cover is our patented product. It is made of silicone rubber which is highly resistant to aging, erosion and corona. It can provide protection against electrical outages caused by incidental contact from tree branches or wildlife.

- Made of silicone rubber.
- High resistance to aging and erosion.
- Providing insulation for catenaries, droppers and conductors against contact from trees or wildlife.
- Simple and fast installation, widely used in emergency repairs or temporary insulation protection of equipment.

Selection Table

Product Size/mm	Φ12	Φ15.6	Φ17	Φ20	Φ24.2	Φ30	Φ32	Φ35	Φ39.8
Conductor Diameter/mm	7~10	10~13	13~15	15~18	18~23	23~28	28~30	30~33	33~37

Spec.	ID(mm)	Wall thickness(mm)and Voltage Rating			
		≤10kV	10~27. 5kV	27. 5kV~35kV	35kV~110kV
Φ12.0	Φ12.0±1.0	2.3±0.3	3.0±0.4	3.0±0.4	4.0±0.5
Φ15.6	Φ15.6±1.0				
Φ17.0	Φ17.0±1.0				
Φ20.0	Φ20.0±1.0				
Φ24.2	Φ24.2±1.0				
Φ30.0	Φ30.0±1.0	-			
Φ32.0	Φ32.0±1.0				
Φ35.0	Φ35.0±1.0				
Φ39.8	Φ39.8±1.0				

WRKG
Overhead Line Cover

Description

The overhead line cover is a cold-applied wraparound cover that provides insulation protection for overhead bare conductors and busbar. It can help prevent electrical outages caused by incidental contact from tree branches or wildlife.

Feature

- Made of cross linked polyolefin .
- Simple and fast wraparound installation.
- Built-in creepage fitting with longer creepage distance and better performance.
- High resistance to aging and erosion.
- Superior UV and abrasion resistance.
- New product sealed with adhesive is available for 25kV.
- Voltage class: 15 kV, 25 kV.

Selection Table

Product No.	Spec.	Conductor Cross Section/mm²	Max Conductor Diameter/mm	Thickness/mm (D)	Length/mm (L)
Voltage class: Up to20kV					
WRKG-1	Φ14	up to 70	14	1.8±0.2	53±2
WRKG-2	Φ18	95/120/150	18	2.2±0.2	68±2
WRKG-3	Φ23	185/240	24	2.3±0.2	74±3
WRKG-4	Φ31	300	28	2.3±0.2	85±3
WRKG-5	Φ38	400-800	38	2.4±0.2	115±3
Voltage class: 25kV **and Above** (Sealed with adhesive)					
WRKG-2*	Φ18	up to 150	18	2.2±0.2	68±2
WRKG-3*	Φ23	185-240	24	2.3±0.2	74±3
WRKG-4*	Φ31	300	28	2.3±0.2	85±3
WRKG-5*	Φ38	400-800	38	2.4±0.2	115±3

Technical Data

Property	Test Method	Standard Value
Tensile Strength	ASTM-D-638	⩾8MPa
Elongation at Break	ASTM-D-638	⩾300%
Volume Resistivity	IEC 60093	⩾$1x10^{14}$Ω・cm
Dielectric Strength	IEC 60243	⩾25kV/mm

WBH
Silicone Rubber Protective Cover

WBH-BY1

WBH-BY5

WBH-BL2

WBH-BL2

WBH-JL2

WBH-DL2

WBH-DL5

WBH-DL7

WBH-XJ

WBH-NJ

WBH-BG

WBH-XJ

- Manufactured from silicone rubber.
- Used to provide environmental protection for various electrical connections.
- Offering tailor-made solutions against specific requirements.

Selection Table

Part No.	Description	Color
WBH-BY1	Protective Covers for Inlets and Outlets	Red、Green、Yellow、Black
WBH-BY5	Protective Covers for Inlets and Outlets	Red、Green、Yellow、Black
WBH-BL2	Protective Covers for Inlets and Outlets	Red、Green、Yellow、Black
WBH-JL2	Protective Covers for Inlets and Outlets	Red、Green、Yellow、Black
WBH-DL2	Protective Covers for Outdoor Drop-off Fuser	Red、Green、Yellow、Black
WBH-DL5	Protective Covers for Outdoor Drop-off Fuser	Red、Green、Yellow、Black
WBH-DL7	Protective Covers for Outdoor Drop-off Fuser	Red、Green、Yellow、Black
WBH-DL9	Protective Covers for Outdoor Drop-off Fuser	Red、Green、Yellow、Black
WBH-XJ	Protective Covers for Overhead Wedge Clamp	Red、Green、Yellow、Black
WBH-NJ	Protective Cover for Tension Clamp	Red、Green、Yellow、Black
WBH-BG	Protective Cover for Parallel Groove Clamp	Red、Green、Yellow、Black
WBH-XJ2	Protective Cover for Suspension Clamp	Red、Green、Yellow、Gray

Feel free to contact us if you need more detailed information.

WRSJB
Busbar Cover

- Manufactured from cross linked polyolefin .
- Widely used to protect complex busbar connections where tube products cannot be applied.
- Offering tailor-made solutions against specific requirements.
- Color: red, yellow, green, black.

Selection Table

No.	I Type			T Type			L Type		
(A×B)	L	W	H	L	W	H	L	W	H
30×8	95	35	50	105	35	60	70	35	60
40×8	125	45	50	140	45	60	75	45	55
50×8	135	55	55	155	55	65	90	55	65
60×8	165	65	75	165	65	75	100	65	75
80×10	185	85	75	195	85	75	130	85	75
100×10	220	105	75	215	105	75	140	105	75
120×10	235	125	75	245	125	75	165	125	75
150×10	260	155	75	285	155	75	195	155	75

Remark:
L=length of cover; W=width of cover; H=height of cover
A=width of busbar; B=thickness of busbar
(All dimensions are in mm)
*According to customer drawings the special products for a variety of inlet and outlet of transformers, fuses, switches, surge arresters and other protective cover are available.

WEYB
Roll-on sealing tube

- Easy, “roll-on” way to insulate and seal cable connections up to 1kV.
- Made of EPDM rubber, resisting damage from exposure to moisture, ozone, fungus and temperature extremes from -60□ to 150□ .
- Dual-wall design with an entrapped lubricant, making installation fast and simple.
- Rolls on the cable with minimal effort, even at temperature below -25□ .
- Ideal for use where heating is not allowed.
- Reusable.

Selection Table

Product No.	Tube length ±5/mm	Application range Cable outer diameter /mm
WEYB-14	160	12～20
WEYB-25	370	26～38

Technical Data

Property	Test Method	Standard Value
Ultimate Tensile	ISO 37	⩾8.1MPa
Ultimate Elongation	ISO 34	⩾750%
Ultimate Tensile after 136°Cx168h	ISO 37	9.5Mpa
Ultimate Elongation after 136°Cx168h	ISO 34	719.89
Water Absorption	ISO 62	0.3%
Dielectric Strength	IEC 60243	8kV/mm
Volume Resistivity	ASTM-D-2303	$1.3x10^{15}$
Environmental Testing	RoHS	Meet the RoHS
Salt Spray Test	GB2423	No crack with ultimate elongation 770% certified by SGS.
Ozone Test	GB7762	No crack certified by SGS.
Low Temperature Ultimate Elongation	-60 °Cx4h	391.4%

WESRT
Electronic Silicone Rubber Tube

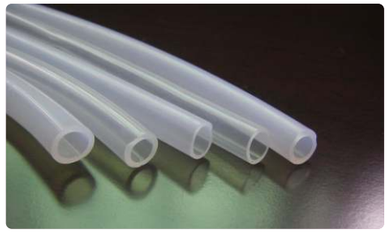

Description

Highly transparent silicone rubber tube is made of good quality silicone rubber through scientific formula and advanced process.
Woer transparent silicone rubber tube demonstrates good performance of flexibility, high temperature resistance and stable properties.
Widely used in high temperature insulation , corona resistance treatment.
Especially applicable in high temperature fluid delivery line, such as water dispenser or coffee machine.

Feature

- Service temperature:-60°C-200°C.
- Flexible, high temperature resistance and corona resistance.
- Conform to RoHS.
- Standard color:transparent, red, blue, white, grey and green.

Selection Table

Product No.	ID(mm)	W.T.&Dielectric Voltage(mm)			
		⩾2500V	⩾4000V	⩾6000V	⩾7000V
Φ0.8	0.8±0.10	0.50±0.10	1.00±0.15	1.50±0.20	2.00±0.25
Φ1.0	1.0±0.10	0.50±0.10	1.00±0.15	1.50±0.20	2.00±0.25
Φ1.5	1.5±0.10	0.50±0.10	1.00±0.15	1.50±0.20	2.00±0.25
Φ2.0	2.0±0.10	0.50±0.10	1.00±0.15	1.50±0.20	2.00±0.25
Φ2.5	2.5±0.10	0.50±0.10	1.00±0.15	1.50±0.20	2.00±0.25
Φ3.0	3.0±0.10	0.50±0.10	1.00±0.15	1.50±0.20	2.00±0.25
Φ3.5	3.5±0.10	0.50±0.10	1.00±0.15	1.50±0.20	2.00±0.25
Φ4.0	4.0±0.10	0.50±0.10	1.00±0.15	1.50±0.20	2.00±0.25
Φ4.5	4.5±0.10	0.50±0.10	1.00±0.15	1.50±0.20	2.00±0.25
Φ5.0	5.0±0.20	0.50±0.10	1.00±0.15	1.50±0.20	2.00±0.25
Φ5.5	5.5±0.20	0.50±0.10	1.00±0.15	1.50±0.20	2.00±0.25
Φ6.0	6.0±0.20	0.50±0.10	1.00±0.15	1.50±0.20	2.00±0.25
Φ6.5	6.5±0.20	0.50±0.10	1.00±0.15	1.50±0.20	2.00±0.25
Φ7.0	7.0±0.20	_	1.00±0.15	1.50±0.20	2.00±0.25
Φ7.5	7.5±0.20	_	1.00±0.15	1.50±0.20	2.00±0.25
Φ8.0	8.0±0.25	_	1.00±0.15	1.50±0.20	2.00±0.25
Φ9.0	9.0±0.25	_	1.00±0.15	1.50±0.20	2.00±0.25
Φ10.0	10.0±0.25	–	1.00±0.15	1.50±0.20	2.00±0.25
Φ11.0	11.0±0.30	–	1.00±0.15	1.50±0.20	2.00±0.25
Φ12.0	12.0±0.30	–	1.00±0.15	1.50±0.20	2.00±0.25
Φ13.0	13.0±0.30	–	1.00±0.15	1.50±0.20	2.00±0.25
Φ14.0	14.0±0.30	–	–	1.50±0.20	2.00±0.25
Φ15.0	15.0±0.30	–	–	1.50±0.20	2.00±0.25
Φ18.0	18.0±0.30	–	–	–	2.00±0.25
Φ20.0	20.0±0.30	–	–	–	2.00±0.25

Remark: Other sizes are available for customizing upon request.

Technical Data

Property	Standard	Test Method
Tensile Strength(MPa)	⩾3.5	ASTM D2671
Elongation Rate at Break (%)	⩾210	ASTM D2671
Tear Strength(kN/m)	⩾22	ASTM D 624
Volume Resistivity(Ω・cm)	⩾1×10^{14}	IEC 60093
Dieletric Strength(kV/mm)	⩾18	IEC 60243
Flammability	VW-1	UL 224

Application

Mainly applicable to coffee machine, water dispenser, iron,rice cooker,fryer,disinfection cabinet, bread machine,fruit pulp machine, water heater and other household appliances.

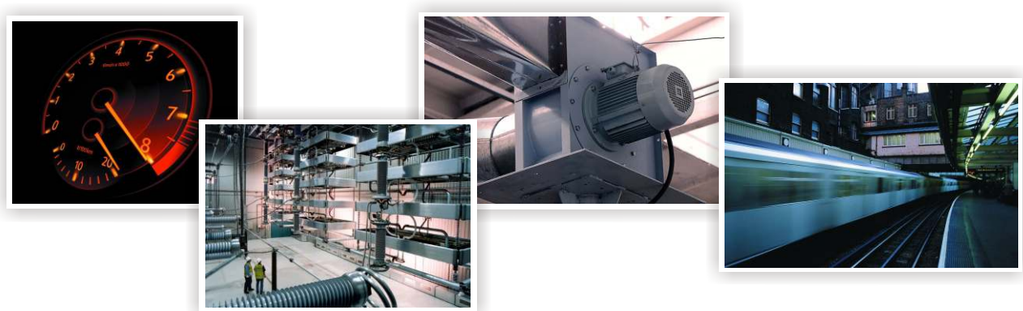

WCAB
Cold Applied Insulation Boot

Description

Woer elastomeric insulating boots are molded parts which fit over the connection between the cable lug and the inline or right-angled bushing to improve phase-to-phase and phase-to-ground insulation. They are used in switchgears and transformers where the clearances are insufficient for normal operation, or to protect against flashover rodents or high humidity.

Features

- Made of silicone rubber.
- Collar is optional for use where the bushing size is smaller.
- Offering tailor-made solutions against specific requirements(size, color).
- Connection can be energized immediately after installation.
- Excellent tracking and erosion resistance.
- Removable and re-installable.
- Fast and simple installation.
- Unlimited shelf life .

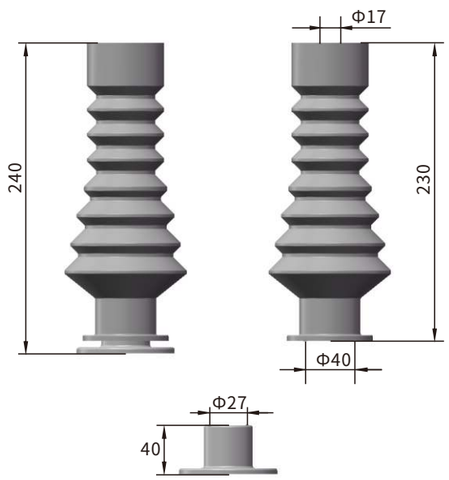

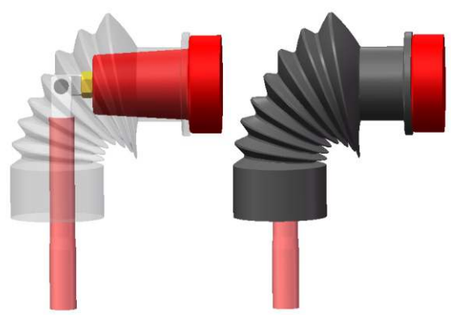

Technical Data

Maximum System Voltage	17.5kV
Basic Impulse Level	95kV
Collar Size	27mm
Bushing Diameter	31-45mm
Bushing Types	250A/630A
Cable Cross Section	35-400mm^2

KEMA Certification

We have acquired KEMA report for these products as following:

Type test certificate for 8.7/15kV cold shrink indoor termination.
Type test report for 8.7/15kV cold shrink joint.
Type test report for 19/33kV cold shrink indoor termination.
Type test report for 19/33kV cold shrink outdoor termination.
Type test report for 19/33kV cold shrink joint.
Type test report for 8.7/15kV heat shrink outdoor termination.
Type test report for 8.7/15kV heat shrink joint.

KEMA

Type test Certificate of
Complete Type Test

Shenzhen Woer Heat-Shrinkable Material Co., Ltd
Shenzhen, China

has successfully passed the type test sequence on a

cold shrinkable indoor termination
Type: 15 kV cold shrink indoor 3 core
Rating: 8,7/15 (17,5) kV

The test object passed the specification of test duties of

IEC 60502-4

The test results are recorded in Certificate No.

07-1015

This Certificate is issued on 6 November 2007

KEMA Nederland B.V.

P.G.A. Bus
KEMA T&D Testing Services
Managing Director

Copyright © KEMA Nederland B.V.
Please note that this document has been issued for information purposes only, and that the original bound and sealed paper copy of the Certificate including the results of the tests of the apparatus will prevail. This document does not imply that KEMA has certified or approved any apparatus other than the specimen tested.

Experience you can trust.

KEMA

Report.

TDT 3140-10

Type test on 15 kV straight joint for XLPE insulated cable

Manufacturer
Shenzhen Woer Heat-Shrinkable Material Co., Ltd.
Shenzhen, Guangdong, China

Arnhem, 30 September 2010

Experience you can trust.

KEMA

Report.

TDT 3149-10

Type test on 15 kV outdoor termination for XLPE insulated cable

Manufacturer
Shenzhen Woer Heat-Shrinkable Material Co., Ltd.
Shenzhen, Guangdong, China

Arnhem, 30 September 2010

Experience you can trust.

KEMA

KEMA HIGH-VOLTAGE LABORATORY

SUMMARY

Order no.: 70470270.000

CLIENT
Shenzhen Woer Heat-Shrinkable Material Co., Ltd.
Woer Mansion, XinWei Industrial Park, Xili 518052, Shenzhen
China

SUMMARY OF TEST REPORT NO.
70470270.000-HVL 05-1352

MATERIAL TESTED
19/33 kV, 3 core indoor cold-shrink termination, 3x120mm^2 copper, 33kV WLN-3/3

TEST PROGRAMME
Complete type test in accordance with IEC 60502-4 (2005) table 4.

Sequence 1
AC Voltage test
Partial discharge test
Lightning Impulse test at θt
Heating cycle test in air
Partial discharge test at θt
Partial discharge test at ambient
Lightning Impulse test
Voltage test for 15 min
Examination

Sequence 3
AC Voltage test
Thermal short circuit screen
Thermal short circuit conductor
Dynamic short circuit
Lightning Impulse test
Voltage test for 15 min
Examination

Sequence 4
Humidity test
Examination

KEMA

07-1015

TYPE TEST CERTIFICATE OF COMPLETE TYPE TEST

OBJECT cold shrinkable indoor termination

TYPE 15kV cold shrink 3-core indoor termination

Rated voltage 8,7/15 (17,5) kV
Conductor cross-section cable 3x185 mm^2

MANUFACTURER Shenzhen Woer Heat-Shrinkable Material Co., Ltd.

CLIENT Shenzhen Woer Heat-Shrinkable Material Co., Ltd.

TESTED BY KEMA HIGH-VOLTAGE LABORATORY
Arnhem, the Netherlands

DATES OF TESTS 2 November 2006 up to and including 19 April 2007

The apparatus, constructed in accordance with the description, drawings and photographs incorporated in this Certificate, has been subjected to the series of proving tests in accordance with

IEC 60502-4

This Type Test Certificate has been issued by KEMA following exclusively the STL Guides.

The results are shown in the record of Proving Tests and the oscillograms attached hereto. The values obtained and the general performance are considered to comply with the above Standard and to justify the ratings assigned by the manufacturer as listed on page 3.

The Certificate applies only to the object tested. The responsibility for conformity of any object having the same designations with that tested rests with the Manufacturer.

This Certificate consists of 55 sheets in total.

© Copyright: Only integral reproduction of this Certificate is permitted without written permission from KEMA. Electronic copies in e.g. PDF-format or scanned version of this Certificate may be available and have the status "for information only". The sealed and bound version of the Certificate is the only valid version.

KEMA Nederland B.V.
P.G.A. Bos
KEMA T&D Testing Services
Managing Director

Arnhem, 6 November 2007

KEMA

TEST REPORT

Report no. 70470269-HVL 06-1213
Client Shenzhen Woer Heat-Shrinkable Material Co., Ltd.
Shenzhen, China

Reference -

Concerning test
Date 3 May 2005 up to and including 12 September 2005
Place High-Voltage Laboratory of KEMA Nederland B.V.,
Arnhem, the Netherlands
Object three-core straight joint
Type 10 kV WLJ-3/3 150-240 mm
Manufacturer same as client

REQUIREMENTS
The requirements as specified in the standard IEC 60502-4 (2005).

TEST PROGRAMME
For the test programme we refer to page 5.

SUMMARY AND CONCLUSION
The results obtained relate only to the work ordered and to the material tested.
The tests were passed.

Author M.G.J. Grooten

KEMA Nederland B.V.
P.G.A. Bos
KEMA T&D Testing Services
Managing Director

This report consists of:
29 pages
2 appendices

Arnhem, 28 March 2007

© Copyright: Publication or reproduction of the contents of this report in any other form than a complete copy to the letter, is not allowed without our written consent.
Electronic copies in e.g. PDF-format or scanned version of this report may be available and have the status "for information only". The bound version of this report is the only valid version.
Utrechtseweg 310, 6812 AR Arnhem. Telephone +31 26 3 56 31 85. Telefax +31 26 4 43 38 43

KEMA

Report.

70470270-HVL 06-1214 2007-03-28

Tests on 33 kV joint